# 4191 W 12TH AVE

SCHEDULE

| | |
|---|---|
| ID0.00 | COVER PAGE |
| ID0.01 | GENERAL NOTES |
| ID0.02 | FINISHES / FIXTURES |
| SCHEDULE | |

PLANS

| | |
|---|---|
| ID1.01 | DEMOLITION PLAN – MAIN FLOOR |
| ID1.02 | DEMOLITION PLAN – UPPER FLOOR |
| ID1.03 | CONSTRUCTION PLAN – MAIN FLOOR |
| ID1.04 | CONSTRUCTION PLAN – UPPER FLOOR |
| ID1.05 | CONSTRUCTION PLAN – BASEMENT |
| ID1.06 | REFLECTED CEILING PLAN – MAIN FLOOR |
| ID1.07 | REFLECTED CEILING PLAN – UPPER FLOOR |
| ID1.08 | REFLECTED CEILING PLAN – BASEMENT |

ELEVATIONS

| | |
|---|---|
| ID2.01 | ENTRY & LIVING ROOM PLAN / ELEVATIONS |
| ID2.02 | MAIN FLOOR STAIR PLAN / ELEVATIONS |
| ID2.03 | LIVING ROOM & DINING ROOM PLAN / ELEVATIONS |
| ID2.04 | KITCHEN PLAN / ELEVATIONS |
| ID2.05 | POWDER ROOM PLAN / ELEVATIONS |
| ID2.06 | UPPER FLOOR STAIR & HALL PLAN / ELEVATIONS |
| ID2.07 | MASTER BED PLAN / ELEVATIONS |
| ID2.08 | MASTER BATH PLAN / ELEVATIONS |
| ID2.09 | BED 2 PLAN/ ELEVATIONS |
| ID2.10 | BATH 2 PLAN / ELEVATIONS |
| ID2.11 | BED 1 PLAN / ELEVATIONS |
| ID2.12 | BATH 1 PLAN / ELEVATIONS |
| ID2.13a | BASEMENT PLAN |
| ID2.13b | BASEMENT ELEVATIONS |
| ID2.13c | BASEMENT ELEVATIONS |
| ID2.14 | LAUNDRY PLAN / ELEVATIONS |
| ID2.15 | BATH PLAN / ELEVATIONS |

| ITEM | DESCRIPTION | DATE |
|---|---|---|

1. All design concepts, drawings, specifications, millwork and details drawn or represented herein are the property of Angelo Yuran Jr and no part of the same shall be reproduced, copied, disclosed or used in any manner other than for the specific project shown without the written consent of the designer.
2. All work shall conform with local and Provincial Building Code latest edition.
3. All dimensions and conditions shall be verified on site and any discrepancies shall be reported to the designer for clarification before proceeding with construction.

DRAWING TITLE: COVER PAGE

PROJECT:

PROJECT NO.: –

CONTACT: –

SCALE: N/A

DRAWING NO.: ID0.00

DATE: 0000/00/00

GENERAL NOTES

1. ALL WORKMANSHIP AND METHODS OF CONSTRUCTION TO COMPLY WITH ALL LOCAL BUILDING CODES, BY-LAWS, AND ALL AUTHORITIES THAT MAY HAVE JURISDICTION OVER THE PROJECT.
2. ADHERENCE TO REQUIREMENTS OF BUILDING TENANT GUIDELINES MANUAL IS MANDATORY.
3. CONTRACTOR TO ENSURE CONTINUOUS MAINTENANCE OF SITE DURING CONSTRUCTION OF MATERIALS AND WORK DONE TO DATE. CONTRACTOR TO PROVIDE THOROUGH CLEANING AFTER WORK IS COMPLETED AND REMOVE ALL DEBRIS FROM SITE. SITE IS TO BE THOROUGHLY HOUSE-CLEANED AFTER COMPLETION OF PROJECT AND BEFORE TENANT OCCUPANCY USING PROFESSIONAL CLEANERS.
4. CONTRACTOR TO VISIT SITE PRIOR TO BIDDING TO VERIFY ALL EXISTING CONDITIONS. DIMENSIONS AND CONDITIONS TO BE VERIFIED PRIOR TO PROCEEDING WITH WORK. ANY DISCREPANCIES ARE TO BE REPORTED TO THE CONTRACTOR. WRITTEN DIMENSIONS WILL TAKE PRECEDENCE OVER SCALED DIMENSIONS. DO NOT SCALE DRAWINGS. LARGE SCALE DRAWINGS WILL HAVE PRIORITY OVER SMALL SCALE DRAWINGS.
5. COMMENCEMENT OF WORK BY THE CONTRACTOR IMPLIES ACCEPTANCE OF THE SPECIFICATIONS, DRAWINGS, AND SITE CONDITIONS. DESIGNER WILL NOT BE RESPONSIBLE FOR EXTRA COSTS INCURRED BY THE TENANT OR THE CONTRACTOR THROUGH ERRORS OR OMISSIONS, AFTER APPROVAL OF THESE DRAWINGS BY THE TENANT, RECEIPT OF THE BUILDING PERMIT AND ACCEPTANCE BY SUB-TRADES.
6. DRAWINGS PREPARED BY DESIGNER SHALL BE CROSS REFERENCED BY THE CONTRACTOR WITH ALL DRAWINGS INCLUDED IN SET, AND WITH ALL DRAWINGS PREPARED BY OTHER CONSULTANTS. ANY DISCREPANCIES BETWEEN DRAWINGS AND / OR SPECIFICATIONS SHALL IMMEDIATELY BE REPORTED TO THE DESIGN CONSULTANT, PRIOR TO ORDERING OF MATERIALS, FURNITURE, EQUIPMENT, FIXTURES, ETC.
7. CONTRACTOR SHALL VERIFY THE AVAILABLE MEANS AND CONDITIONS AFFECTING THE MOVEMENT OF MATERIALS AND COMPONENTS INTO AND WITHIN THE BUILDING.
8. ALL WORK PERFORMED SHALL BE OF THE HIGHEST QUALITY AND DONE ONLY BY EXPERIENCED TRADES. EQUAL ALTERNATIVE ITEMS ACCEPTED ONLY UPON REVIEWED BY THE DESIGNER. ALL MATERIALS NOT SPECIFIED SHALL SUIT AND BE SPECIFIC TO THE PURPOSE INTENDED.
9. LEAD TIMES ON ALL MATERIALS AND FIXTURES TO BE VERIFIED UPON THE START OF THE PROJECT. THE DESIGNER WILL NOT BE HELD RESPONSIBLE FOR MATERIALS AND FIXTURES NOT ORDERED ON TIME. DELAYS AND COSTS INCURRED DUE TO THE SAME, THE CONTRACTOR WILL BE HELD RESPONSIBLE.
10. EXCEPT WHERE OTHERWISE NOTED, CONTRACTOR IS RESPONSIBLE FOR SUPPLY AND INSTALLATION OF ALL ITEMS INDICATED ON DRAWINGS, C/W ALL ACCESSORIES AND FITTINGS.
11. ALL AREAS OF EXISTING BASE BUILDING THAT ARE TO RECEIVE NEW FINISHES ARE TO BE PATCHED AND MADE GOOD TO RECEIVE THE SAME.
12. ALL EQUIPMENT IS TO BE INSTALLED IN ACCORDANCE WITH MANUFACTURERS WRITTEN SPECIFICATIONS AND INSTRUCTIONS.
13. STORAGE OF MATERIALS AND EQUIPMENT WILL NOT BE ALLOWED OUTSIDE OF THE DEMISING AREA OF THE TENANT, UNLESS PREVIOUSLY APPROVED BY THE BUILDING OWNER.
14. ALL EXISTING CORRIDOR(S) AND DEMISING PARTITIONS ADJACENT TO TENANT SPACE TO BE UPGRADED TO CODE AS REQUIRED.
15. WORK BY ALL TRADES SHALL BE GUARANTEED FOR A MINIMUM OF (1) YEAR. MILLWORK MUST BE GUARANTEED FOR A MINIMUM OF (2) YEARS AND SHALL BE INSPECTED BY AWMAC SUBSEQUENT TO COMPLETION OF PROJECT.
16. NO ASSUMPTIONS ARE TO MADE ON SITE BY THE CONTRACTOR. ITEMS THAT REQUIRE CLARIFICATION MUST BE VERIFIED BY THE DESIGNER.
17. ALL NOTES, SCHEDULES AND LEGENDS MUST BE REVIEWED BY THE CONTRACTOR PRIOR TO BIDDING AND DURING CONSTRUCTION PROCESS.
18. THE CONTRACTOR SHALL BE RESPONSIBLE FOR INSURING THAT ALL MATERIALS USED ARE INSTALLED IN SUCH A MANNER TO BE STRUCTURALLY SECURE, AND CONFORMING TO EARTHQUAKE SUPPORT REQUIREMENTS. THE CONTRACTOR MUST ALSO VERIFY THAT MATERIALS USED CONFORM TO AND DO NOT EXCEED STRUCTURAL LOADING LIMITS.
19. ALL SPECIFICATIONS AS NOTED, NO SUBSTITUTIONS UNLESS REVIEWED BY THE DESIGNER.

DEMOLITION NOTES

1. REMOVE EXISTING INTERIOR AND DEMOUNTABLE PARTITIONS, INTERIOR GLAZING, DOORS/FRAMES, MILLWORK, FLOORING (CARPET TILE AND VCT) AND VINYL BASE, AS REQUIRED.
2. PATCH AND REPAIR ALL WALLS TO MATCH BLDG. STANDARD WHERE DEMOLITION OCCURRED.
3. REFINISH DAMAGED SURFACES TO MATCH ADJACENT FINISHES. FOR CONTINUOUS SURFACES REFINISH TO NEAREST INTERSECTION.
4. BAG ALL WINDOW COVERINGS WHERE REQUIRED, PRIOR TO COMMENCEMENT OF WORK.
5. PROTECT EXISTING BUILDING AND CONTENTS DURING ENTIRE PERIOD OF CONSTRUCTION.
6. DISCONNECT ELECTRICAL AND TELEPHONE SERVICE LINES IN WORK TO BE DEMOLISHED IN ACCORDANCE WITH RULES AND REGULATIONS OF AUTHORITIES HAVING JURISDICTION.
7. LEAVE WORK IN SAFE CONDITION AT THE END OF EACH DAY'S WORK.
8. LOCATE MATERIALS ON SITE TO CAUSE THE LEAST INTERFERENCE WITH WORK ACTIVITIES AND MINIMUM DISTURBANCE TO OTHER TENANTS.
9. REMOVE ALL DEBRIS AND VACUUM TO LEAVE ALL SURFACES FREE OF CONSTRUCTION DUST.

| ITEM | DESCRIPTION | DATE |
|---|---|---|

1. All design concepts, drawings, specifications, millwork and details drawn or represented herein are the property of Angela Yuran JI and no part of the same shall be reproduced, copied, disclosed or used in any manner other than for the specific project shown without the written consent of the designer.
2. All work shall conform with local and Provincial Building Code latest edition.
3. All dimensions and conditions shall be verified on site and any discrepancies shall be reported to the designer for clarification before proceeding with construction.

DRAWING TITLE:

PROJECT:

PROJECT NO.:
—

CONTACT:
—

SCALE:
N/A

DRAWING NO.:
ID0.01

DATE:
0000/00/00

## FINISHES SCHEDULE

| CODE | DESCRIPTION | SPECIFICATION | SUPPLIER/ MANUFACTURER | REMARK |
|---|---|---|---|---|
| GLASS | | | | |
| GL-1 | GLASS (LOW IRON GLASS) | LAMINTED GLASS PANEL COLOUR: CLEAR THICKNESS: 12mm | OPEN TO CONTRACTOR SELECTION | LOCATIONS NOTED ON ELEVATIONS |
| GL-2 | GLASS (LOW IRON GLASS) | LAMINTED GLASS PANEL COLOUR: SMOKED THICKNESS: 12mm | OPEN TO CONTRACTOR SELECTION | 2ND FLOOR SLIDING DOOR |
| HARDWOOD FLOORING | | | | |
| F-1 | HARDWOOD FLOORING | MATCH DESIGNER'S SAMPLE | MATCH DESIGNER'S SAMPLE | HERRINGBONE PATTER THROUGHOUT |
| MIRROR | GENERAL NOTES: – 3 SAMPLES OF EACH MIRROR TO BE SUBMITTED TO INTERIOR DESIGNER FOR REVIEW. | | | |
| MR-1 | MIRROR | CLEAR MIRROR THICKNESS: 1/8" | OPEN TO CONTRACTOR SELECTION | LOCATIONS NOTED ON ELEVATIONS |
| PAINT | | | | |
| PA-1 | PAINT | STYLE: LATEX ACRYLIC COLOUR: EGRET WHITE COLOUR NO.: 7570 FINISH/SHEEN: MATTE | SUPPLIER: SHERWIN WILLIAMS | GENERAL WALL PAINT THROUGHOUT |
| PA-2 | PAINT | STYLE: LATEX ACRYLIC COLOUR: SNOWBOUND COLOUR NO.: 7004 FINISH/SHEEN: MATTE | SUPPLIER: SHERWIN WILLIAMS | GENERAL CEILING PAINT THROUGHOUT |
| WOOD STAIN | | | | |
| S-1 | WOOD STAIN | STAIN TO MATCH DESIGNER SAMPLE; PROVIDE SAMPLE FOR DESIGNER REVIEW. | OPEN TO CONTRACTOR SELECTION | GENERAL INTERIOR TRIMS / DOOR & FRAME THROUGHOUT |
| STONE | | | | |
| ST-1 | STONE SLAB | ELEGANT GREY SATIN FINISH: LEATHERED | C&S TILE – MARGRANITE 604–435–4431 | LIVING / KITCHEN AREAS |
| ST-2 | STONE SLAB | SATURARIO MATTE: FINISH: POLISHED | C&S TILE – MARGRANITE 604–435–4431 | WASHROOM / LAUNDRY AREAS |
| TILE | | | | |
| T-1 | PORCELAIN TILE | GM. SIL. GRY. VC 1224 FINISH: F/B | SUPPLIER: OLYMPIA TILE 604–294–2244 | POWDER ROOM |
| T-2 | PORCELAIN TILE | ETERNA IMPERIAL GREY 24/48 FINISH: MATTTE | SUPPLIER: OLYMPIA TILE 604–294–2244 | ENSUITE & MASTER BATHROOM |
| WALL COVERING | | | | |
| WC-1 | WALLCOVERING | PHILLIP JEFFRIES WALLCOVERING COLLECTION: ALL WOUND UP COLOR: WOAD POWDER CODE: 3579 | SUPPLIER: PHILLIP JEFFRIES REP: LEAH BUCHAN PHONE: 604.220.8883 | POWDER ROOM |
| WC-2 | WALLCOVERING | YORK WALLCOVERINGS PATTERN NAME: DUALITY CODE: MW9270 | SUPPLIER: METRO WALLCOVERINGS REP: SEAN MCDERMOTT PHONE: 604.736.9756 | TEA DISPLAY ROOM |
| WOOD | | | | |
| WO-1 | WOOD VENEER | MATCH DESIGNER'S SAMPLE | MATCH DESIGNER'S SAMPLE | WOOD SCREENS, BATHROOMS, TEA DISPLAY, CLOSETS & OTHER LOCATIONS NOTED ON ELEVATION |
| WC-2 | WOOD VENEER | MATCH DESIGNER'S SAMPLE | MATCH DESIGNER'S SAMPLE | MAIN KITCHEN & WOK KITCHEN CABINETRY |

## APPLIANCE SCHEDULE

| SYMBOL | DESCRIPTION | MANUFACTURER | MODEL # | REMARK |
|---|---|---|---|---|
| A-1 | | | | |
| A-2 | | | | |
| A-3 | 24" SPEED OVEN | MIELE | H6700BM | MAIN KITCHEN |
| A-4 | 30" CONTOURLINE OVEN | MIELE | H6680BP | MAIN KITCHEN |
| A-5 | 24" BUILT IN MICROWAVE OVEN | MIELE | M 6160 TC | MAIN KITCHEN |
| A-6 | 30" COLUMN FREEZER WITH ICE MAKER (PANEL READY) | SUB–ZERO | IC–30FI | MAIN KITCHEN; LEFT HINGE |
| A-7 | 30" COLUMN REFRIGERATOR WITH INTERNAL DISPENSER (PANEL READY) | SUB–ZERO | IC–30RID | MAIN KITCHEN; RIGHT HINGE |
| A-8 | 24" INTEGRATED REFRIGERATOR / FREEZER (PANEL READY) | LIEBHERR | HC1001B | WOK KITCHEN; LEFT HINGE |
| A-9 | 36" SEALED BURNER RANGE TOP – 6 BURNERS (RED KNOB) | WOLF | SRT366 | WOK KITCHEN |
| A-10 | 36" PRO WALLHOOD + 900 CFM REMOTE BLOWER | WOLF | PW362418 + 801641 | WOK KITCHEN |
| A-11 | DRYER | TBC BY OWNER | TBC BY OWNER | LAUNDRY ROOM |
| A-12 | FIREPLACE | DIMPLEX | OPTI–MYST PRO 1000 BUILT–IN ELECTRIC CASSETTE 40" PRODUCT # CDFI1000–PRO | LIVING AREA / DINING ROOM |
| A-13 | UNDER COUNTER BEVRAGE CENTER | LIEBHERR | RU–510 | 2ND FLOOR MINI–BAR |

## LIGHT FIXTURE SCHEDULE

| SYMBOL | DESCRIPTION | MANUFACTURER | NAME | REMARK |
|---|---|---|---|---|
| L-1 | GENERAL RECESSED POT LIGHT | AS PER BUILDER | N/A | GENERAL THROUGHOUT |
| L-2 | ENTRY CHANDELIER | BOCCI SUPPLIER: LIVINGSPACE | BOCCI #79 CUSTOM | ENTRY |
| L-3 | DINING ROOM CHANDELIER | GABRIELE SCOTT SUPPLIER: LIGHTFORM | LUNA CHANDELIER 1 TIER; FINISHES TBD | DINING ROOM |
| L-4 | TEA ROOM PENDANT | BOCCI SUPPLIER: LIVINGSPACE | BOCCI #73 CUSTOM | TEA ROOM |
| L-5 | KITCHEN ISLAND PENDANTS | | | KITCHEN |
| L-6 | DIRECTIONAL LIGHT | AS PER BUILDER | N/A | REFER TO RCP FOR LOCATIONS NOTED |
| L-7 | TRACK LIGHTING | | | TEA DISPLAY ROOM |
| L-8 | RECESSED WALL LIGHT | | | STAIRS |
| LED | LED STRIP LIGHT | AS PER BUILDER | N/A | GENERAL THROUGHOUT |

## PLUMBING SCHEDULE

| SYMBOL | DESCRIPTION | MANUFACTURER | MODEL # | REMARK |
|---|---|---|---|---|
| PL-1 | KITCHEN SINK FAUCET | KOHLER | K–24982–BL | MAIN KITCHEN & WOK KITCHEN |
| PL-2 | KITCHEN SINK & SINK DRAIN | KOHLER | K–5285–NA<br>K–8801–CP | MAIN KITCHEN & WOK KITCHEN |
| PL-3 | 24" DISHWASHER DRAWER (PANEL READY) | FISHER PAYKEL | DD24SHT19_N | MAIN KITCHEN |
| PL-4 | BUILT–IN FULLY INTEGRATED DISHWASHER (PANEL READY) | MIELE | G7156SCVi | WOK KITCHEN |
| PL-5 | STARCK ORGANIC MINI HIGH RISER FAUCET IN CHROME | HANSGROHE | 12012001 | POWDER ROOM 1 |
| PL-6 | VEIL TROUGH VESSEL BATHROOM SINK & POP–UP CLICKER DRAIN | KOHLER | K20705–0<br>K7124–A–CP | POWDER ROOM |
| PL-7 | WALL–HUNG COMPACT ELONGATED DUAL FLUSH TOILET WITH QUIET CLOSE SEAT, WITH IN–WALL TANK | KOHLER | K–6299–0<br>K–6284–NA | POWDER ROOM |
| PL-8 | WALL–HUNG COMPACT ELONGATED DUAL FLUSH TOILET WITH QUIET CLOSE SEAT, WITH IN–WALL TANK | KOHLER | K–6299–0<br>K–6284–NA | POWDER ROOM |
| PL-9 | SINGLE–HANDLE BATHROOM SINK FAUCET | KOHLER | K97347–4 | POWDER ROOM 2 |
| PL-10 | ONE–PIECE ELONGATED DUAL FLUSH TOILET WITH SKIRTED TRAPWAY & CONCEALED CORDS | KOHLER | K–1381–HC–0 | TYPICAL ENSUITE |
| PL-11 | DUAL FUNCTION SHOWER KIT WITH HAND SHOWER IN CHROME | KOHLER | HG–KIT4 | TYPICAL ENSUITE |
| PL-12 | VEIL SMALL VESSEL SINK; NO OVERFLOW & POP–UP CLICKER DRAIN | KOHLER | K20704–0<br>K7124–A–CP | TYPICAL ENSUITE & MASTERS BATHROOM |
| PL-13 | AVID TALL SINGLE HANDLE BATHROOM SINK FAUCET | KOHLER | K–97347–4–CP | TYPICAL ENSUITE |
| PL-14 | FREESTANDING TUB (WHITE) & TUB DRAIN | MONACO<br>OS&B | 44460 – 63" TUB<br>44462 – 67" TUB<br>IDT35 | TYPICAL ENSUITE |
| PL-15 | TUB FILLER TRIM & TUB FILLER | HANSGROHE<br>AXOR STARCK | 72413001 (TUB FILLER TRIM)<br>10452181 (TUB FILLER) | TYPICAL ENSUITE |
| PL-16 | SINGLE–HANDLE BATHROOM SINK FAUCET | KOHLER | K97347–4 | MASTER BATHROOM |
| PL-17 | VEIL COMFORT HEIGHT SKIRTED ONE–PIECE ELONGATED DUAL–FLUSH INTELLIGENT TOILET – WHITE | KOHLER | K–5401–PA–0 | MASTER BATHROOM |
| PL-18 | SHOWER SET<br>RAINFINITY BATON 100 1–JET HAND SHOWER IN CHROME<br>UNICA S PURO 24" WALL BAR<br>AQUASHEET WALLMOUNT DUAL FUNCTION RAIN–HEAD<br>THERMOSTATIC 3 VOLUME CONTROLS SHOWER TRIM & CONTROLS MODULE<br>FREESTANDING TUB DRAIN | HANSGROHE<br>HANSGROHE<br>AQUABRASS<br>AXOR<br>OS&B | 26866001 (HANDSHOWER)<br>28632000 (WALL BAR)<br>2872PC (RAIN HEAD)<br>10751001 (TRIM)<br>10750181 (MODULE)<br>IDT35 (TUB DRAIN) | MASTERS BATHROOM |
| PL-19 | VEIL 66" x 36" FREESTANDING BATH WITH CENTER TOE TAP DRAIN – WHITE | KOHLER | K8331–0 | MASTER BATHROOM |
| PL-20 | TUB FILLER TRIM & ROUGH IN | HANSGROHE | 72413001<br>10452181 | MASTER BATHROOM |
| PL-21 | LAUNDRY SINK & SINK DRAIN | KOHLER | K–5286–NA<br>K–8801–CP | LAUNDRY ROOM & 2ND FLOOR MINI BAR |
| PL-22 | LAUNDRY SINK FAUCET | KOHLER | K–7505–BL | LAUNDRY ROOM |
| PL-23 | LAUNDRY MACHINE | TBC BY OWNER | TBC BY OWNER | LAUNDRY ROOM |
| PL-24 | BAR SINK | KOHLER | K–5286–NA | 2ND FLOOR MINI BAR |

## HARDWARE & ACCESSORIES SCHEDULE

| SYMBOL | DESCRIPTION | MANUFACTURER | MODEL # | REMARK |
|---|---|---|---|---|
| H- | GENERAL DOOR LEVER | WEISER | MONTREAL SQUARE ROSE PASSAGE LEVERS – MATTE BLACK SKU NUMBER: WEB289 | GENERAL DOOR LEVERS THROUGHOUT; CONFIRM PASSAGE OR PRIVACY WITH DESIGNER |
| H-2 | KITCHEN APPLIANCE PULL | RICHELIEU | CONTEMPORARY METAL PULL 8160 PRODUCT #: BP8160457900 FINISH: MATTE BLACK | MAIN KITCHEN & WOK KITCHEN |
| H-3 | BATHROOM ACCESSORIES SET<br>RAIL BATH TOWEL HOLDER 800MM<br>SINGLE HOOK<br>ROLL HOLDER WITH COVER | AXOR | | ALL POWDER ROOMS & BATHROOMS; REFER TO ELEVATION FOR APPLICABLE PIECES. |
| H-4 | TEA DISPLAY ROOM LADDER PULL DOOR HANDLE | RICHELIEU | 1 1/2" (38 mm) DIAMETER BACK–TO–BACK LADDER HANDLE PRODUCT #: 705483638169 FINISH: MATTE BLACK | TEA DISPLAY ROOM |
| H-5 | LAUNDRY ROOM HANGER ROD | OPEN TO CONTRACTOR | LENGTH CUSTOM TO ELEVATION FINISH: MATTE BLACK | LAUNDRY ROOM |
| H-6 | SHOWER DOOR HANDLE AND TOWEL HANGER | RICHELIEU 604–273–3108 | SQUARE TUBULAR HANDLE AND TOWEL BAR COMBO, 90° CORNER PRODUCT #: 8702S100624171 FINISH: ; POLISHED STAINLESS STEEL | ENSUITE |
| H-7 | COAT HOOK | RICHELIEU 604–273–3108 | CONTEMPORARY STAINLESS STEEL HOOK PRODUCT #: 51124170 | GARAGE |
| H-8 | TV | TBC | TBC | FAMILY ROOM |
| H-9 | BOCCI OUTLET | BOCCI 604–639–5195 | 22 ALTERNATE | KITCHEN & MASTER ENSUITE |
| H-10 | DECORATIVE RECEPTACLE, SWITCH, AND USB FACEPLATE | BUSTER AND PUNCH (ORDER ONLINE) BUSTERANDPUNCH.COM/US | BLACK PLATE CUSTOM 3 OPENING 1 MODULE : DIMMER (BLACK) 1 MODULE : DUPLEX (BLACK) 1 MODULE : USB (BLACK) | MASTER BEDROOM |

| ITEM | DESCRIPTION | DATE |
|---|---|---|
| | | |

1. All design concepts, drawings, specifications, millwork and details drawn or represented herein are the property of Angela Yuron Jl and no part of the same shall be reproduced, copied, disclosed or used in any manner other than for the specific project shown without the written consent of the designer.
2. All work shall conform with local and Provincial Building Code latest edition.
3. All dimensions and conditions shall be verified on site and any discrepancies shall be reported to the designer for clarification before proceeding with construction.

DRAWING TITLE: SCHEDULE

PROJECT:

PROJECT NO.: –

CONTACT: –

SCALE: N/A

DRAWING NO.: ID0.02

DATE: 0000/00/00

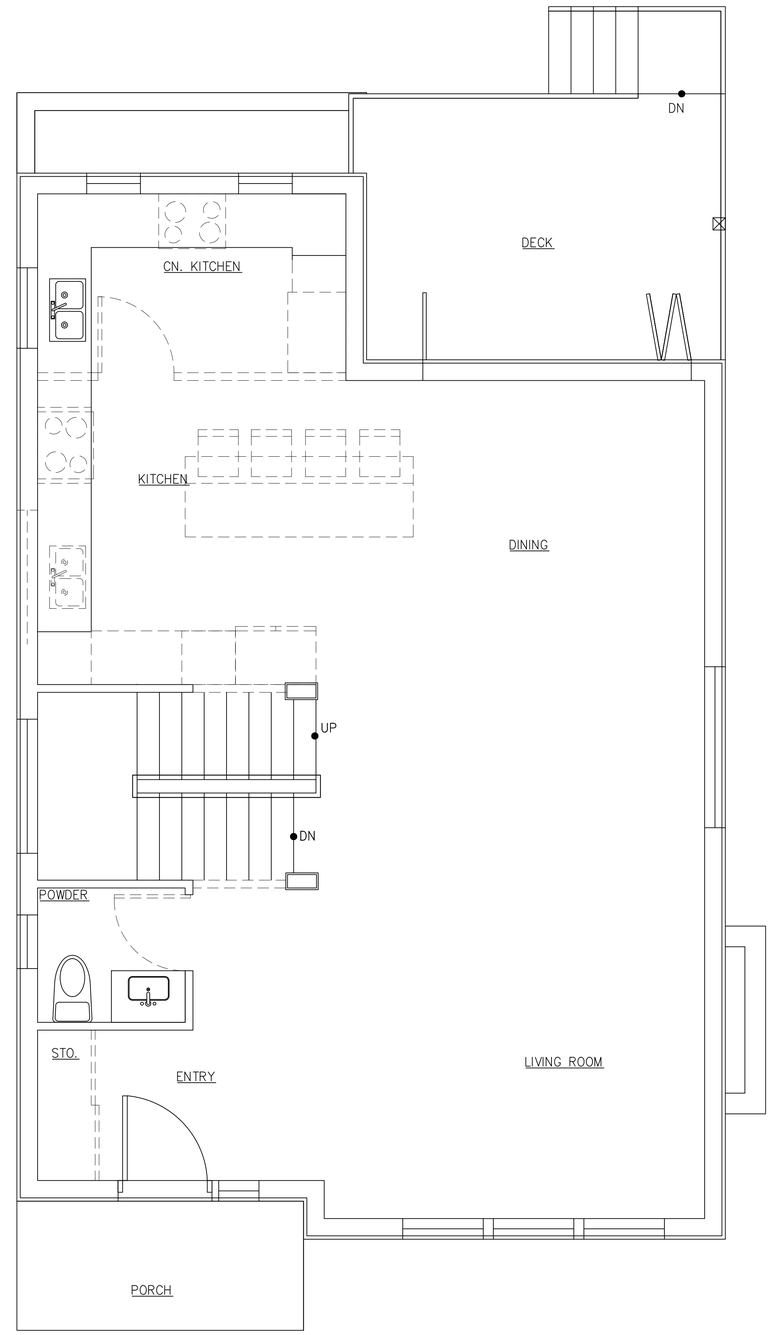


1 ID1.01 DEMOLITION PLAN – MAIN FLOOR
Scale: 3/8" = 1'–0"

WALL TYPE LEGEND

WALL TO BE DEMOLISHED

WALL TO REMAIN

| ITEM | DESCRIPTION | DATE |
|---|---|---|

1. All design concepts, drawings, specifications, millwork and details drawn or represented herein are the property of Angela Yuran Ji and no part of the same shall be reproduced, copied, disclosed or used in any manner other than for the specific project shown without the written consent of the designer.
2. All work shall conform with local and Provincial Building Code latest edition.
3. All dimensions and conditions shall be verified on site and any discrepancies shall be reported to the designer for clarification before proceeding with construction.

DRAWING TITLE: DEMOLITION PLAN – MAIN FLOOR

PROJECT:

PROJECT NO.: –

CONTACT: –

SCALE:

DRAWING NO.: ID1.01

DATE: 0000/00/00

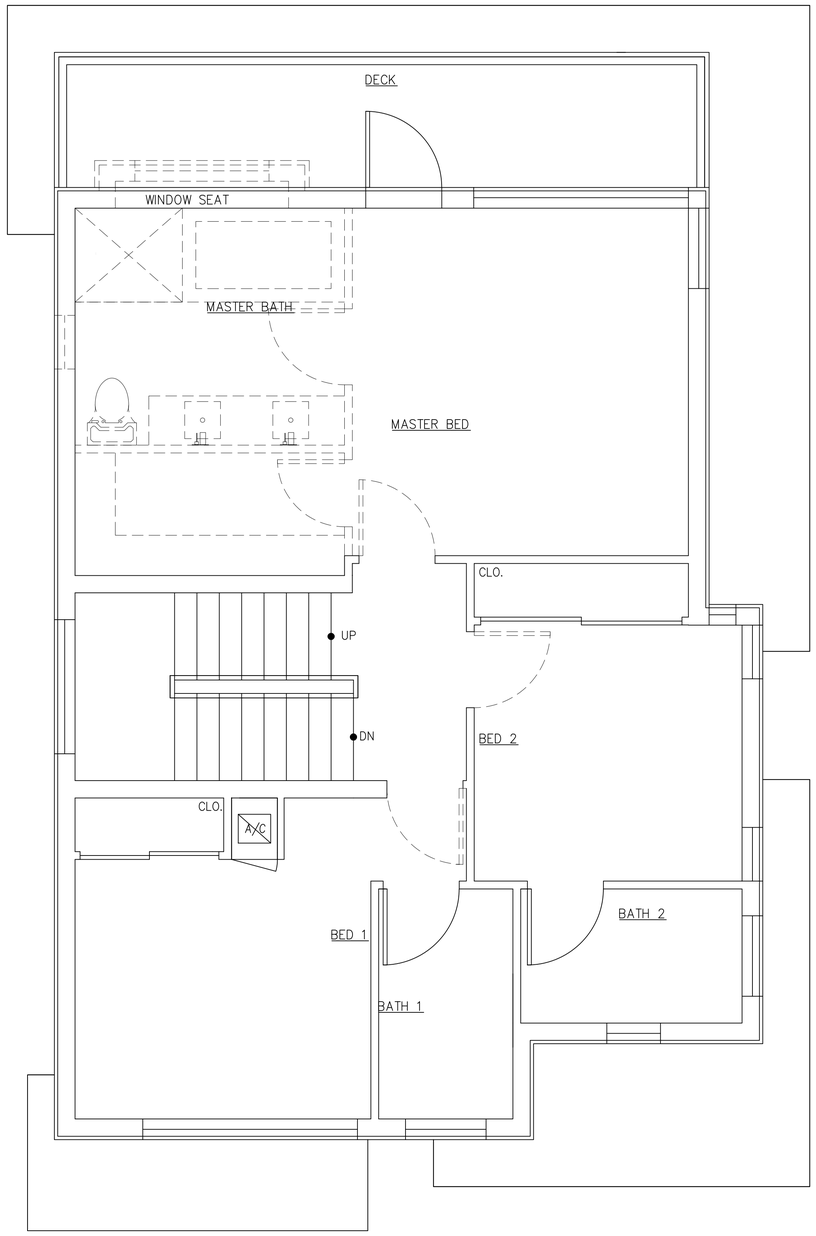


1 ID1.02 DEMOLITION PLAN – UPPER FLOOR
Scale: 3/8" = 1'-0"

WALL TYPE LEGEND

WALL TO BE DEMOLISHED

WALL TO REMAIN

| ITEM | DESCRIPTION | DATE |
|---|---|---|

1. All design concepts, drawings, specifications, millwork and details drawn or represented herein are the property of Angela Yuran JI and no part of the same shall be reproduced, copied, disclosed or used in any manner other than for the specific project shown without the written consent of the designer.
2. All work shall conform with local and Provincial Building Code latest edition.
3. All dimensions and conditions shall be verified on site and any discrepancies shall be reported to the designer for clarification before proceeding with construction.

DRAWING TITLE:
DEMOLITION PLAN – UPPER FLOOR

PROJECT:

PROJECT NO.:
–

CONTACT:
–

SCALE:

DRAWING NO.:
ID1.02

DATE:
0000/00/00

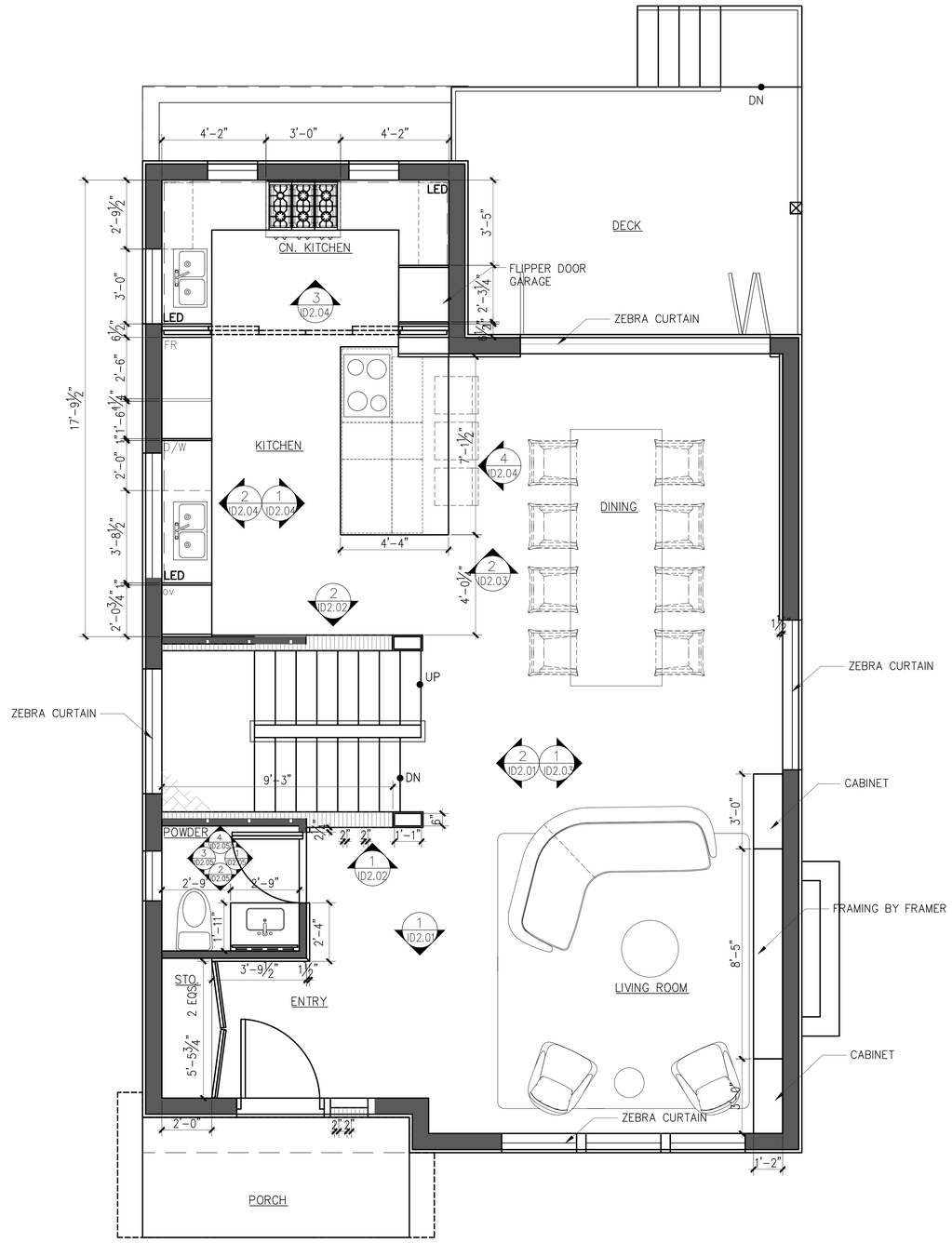


1 / ID1.03 CONSTRUCTION PLAN – MAIN FLOOR
Scale: 3/8" = 1'-0"

| ITEM | DESCRIPTION | DATE |
|---|---|---|

1. All design concepts, drawings, specifications, millwork and details drawn or represented herein are the property of Angela Yuran Jl and no part of the same shall be reproduced, copied, disclosed or used in any manner other than for the specific project shown without the written consent of the designer.
2. All work shall conform with local and Provincial Building Code latest edition.
3. All dimensions and conditions shall be verified on site and any discrepancies shall be reported to the designer for clarification before proceeding with construction.

DRAWING TITLE: CONSTRUCTION PLAN – MAIN FLOOR

PROJECT:

PROJECT NO.: –

CONTACT: –

SCALE:

DRAWING NO.: ID1.03

DATE: 0000/00/00

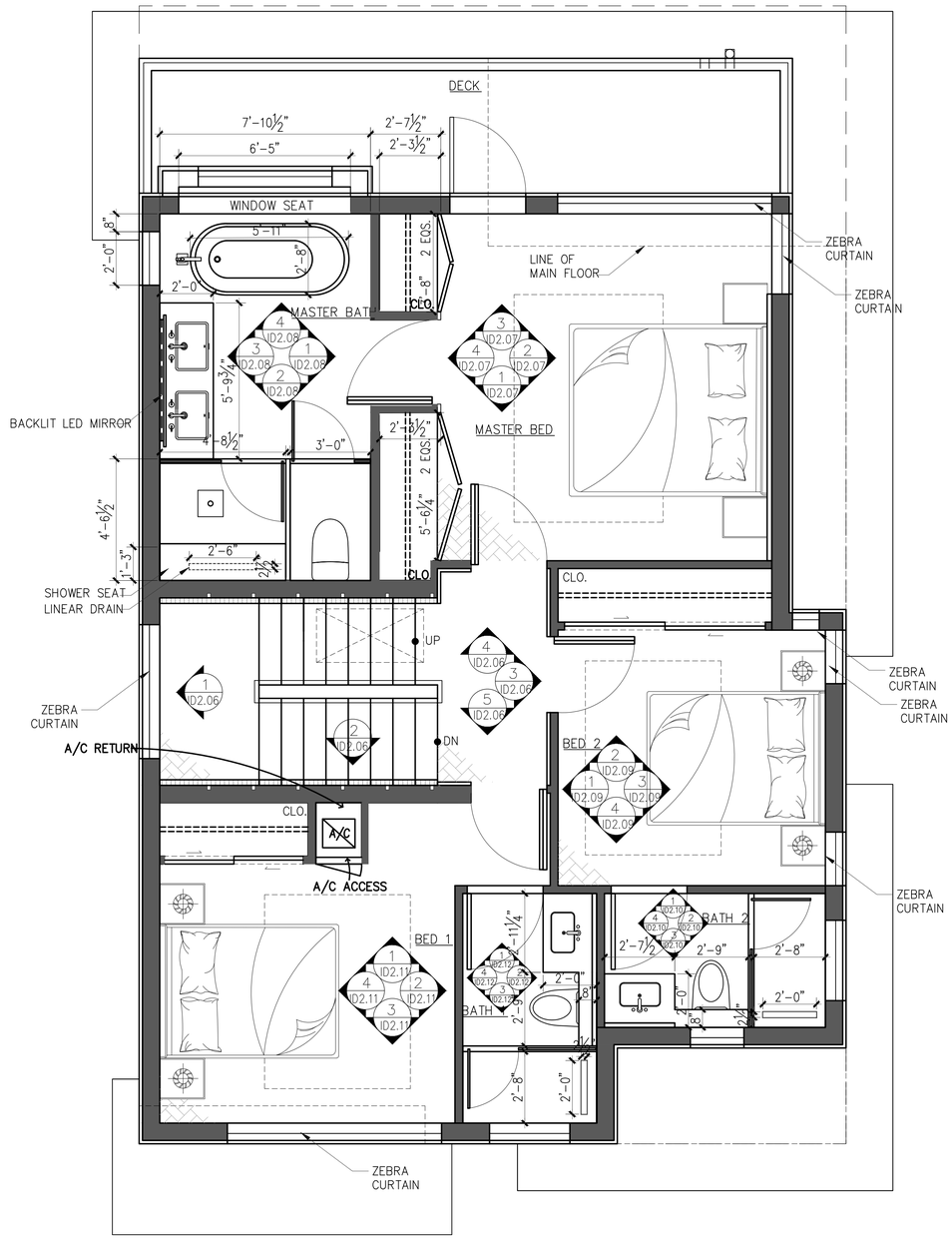


1 / ID1.04 CONSTRUCTION PLAN – UPPER FLOOR
Scale: 3/8" = 1'-0"

| ITEM | DESCRIPTION | DATE |
|---|---|---|

1. All design concepts, drawings, specifications, millwork and details drawn or represented herein are the property of Angela Yuran Δ and no part of the same shall be reproduced, copied, disclosed or used in any manner other than for the specific project shown without the written consent of the designer.
2. All work shall conform with local and Provincial Building Code latest edition.
3. All dimensions and conditions shall be verified on site and any discrepancies shall be reported to the designer for clarification before proceeding with construction.

DRAWING TITLE: CONSTRUCTION PLAN – UPPER FLOOR

PROJECT:

PROJECT NO.: –

CONTACT: –

SCALE:

DRAWING NO.: ID1.04

DATE: 0000/00/00

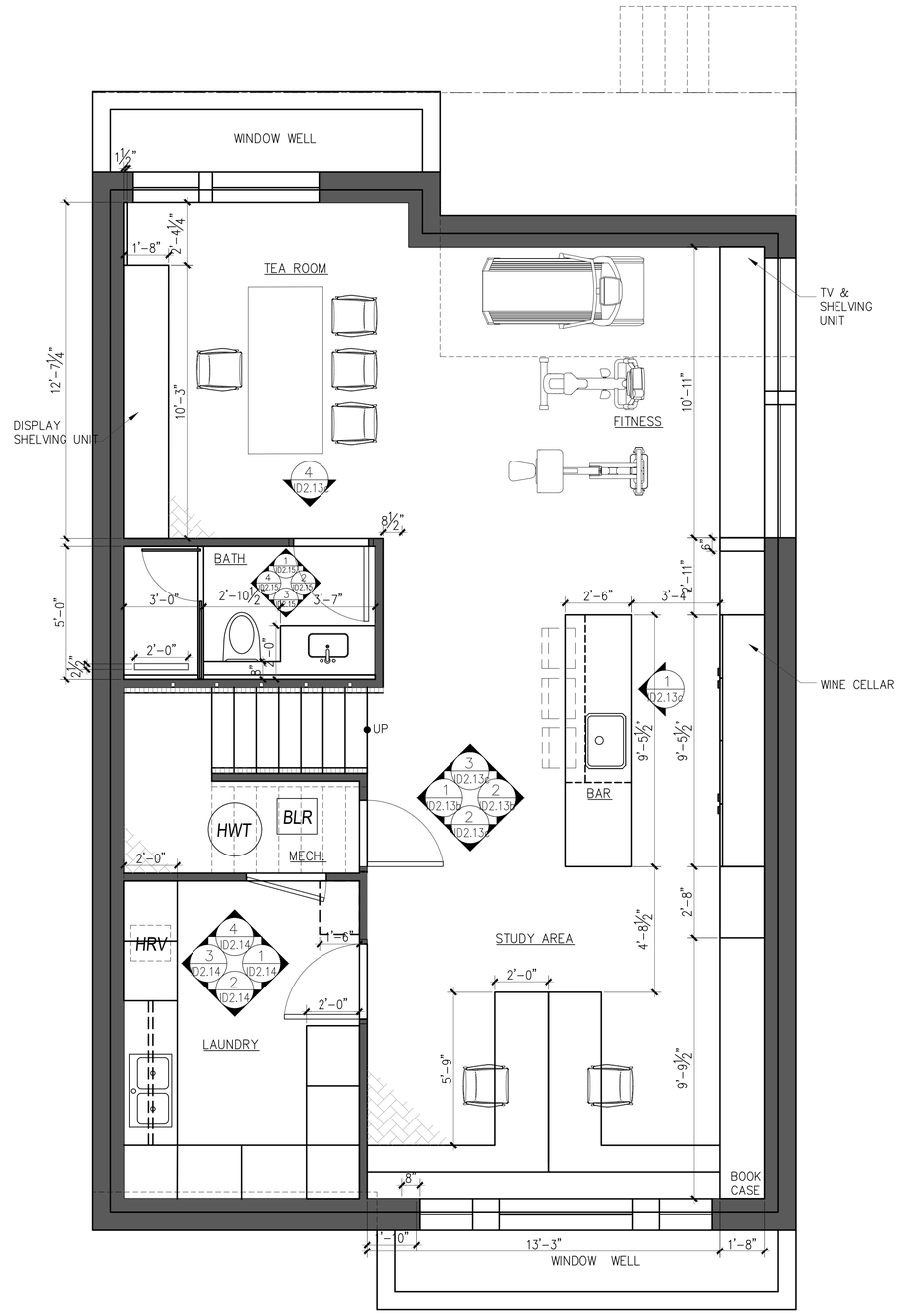


1 / ID1.05 CONSTRUCTION PLAN – BASEMENT
Scale: 3/8" = 1'-0"

| ITEM | DESCRIPTION | DATE |
|---|---|---|

1. All design concepts, drawings, specifications, millwork and details drawn or represented herein are the property of Angela Yuran Jl and no part of the same shall be reproduced, copied, disclosed or used in any manner other than for the specific project shown without the written consent of the designer.
2. All work shall conform with local and Provincial Building Code latest edition.
3. All dimensions and conditions shall be verified on site and any discrepancies shall be reported to the designer for clarification before proceeding with construction.

DRAWING TITLE: CONSTRUCTION PLAN – BASEMENT

PROJECT:

PROJECT NO.: –

CONTACT: –

SCALE:

DRAWING NO.: ID1.05

DATE: 0000/00/00

CEILING TYPE LEGEND

DROPPED CEILING

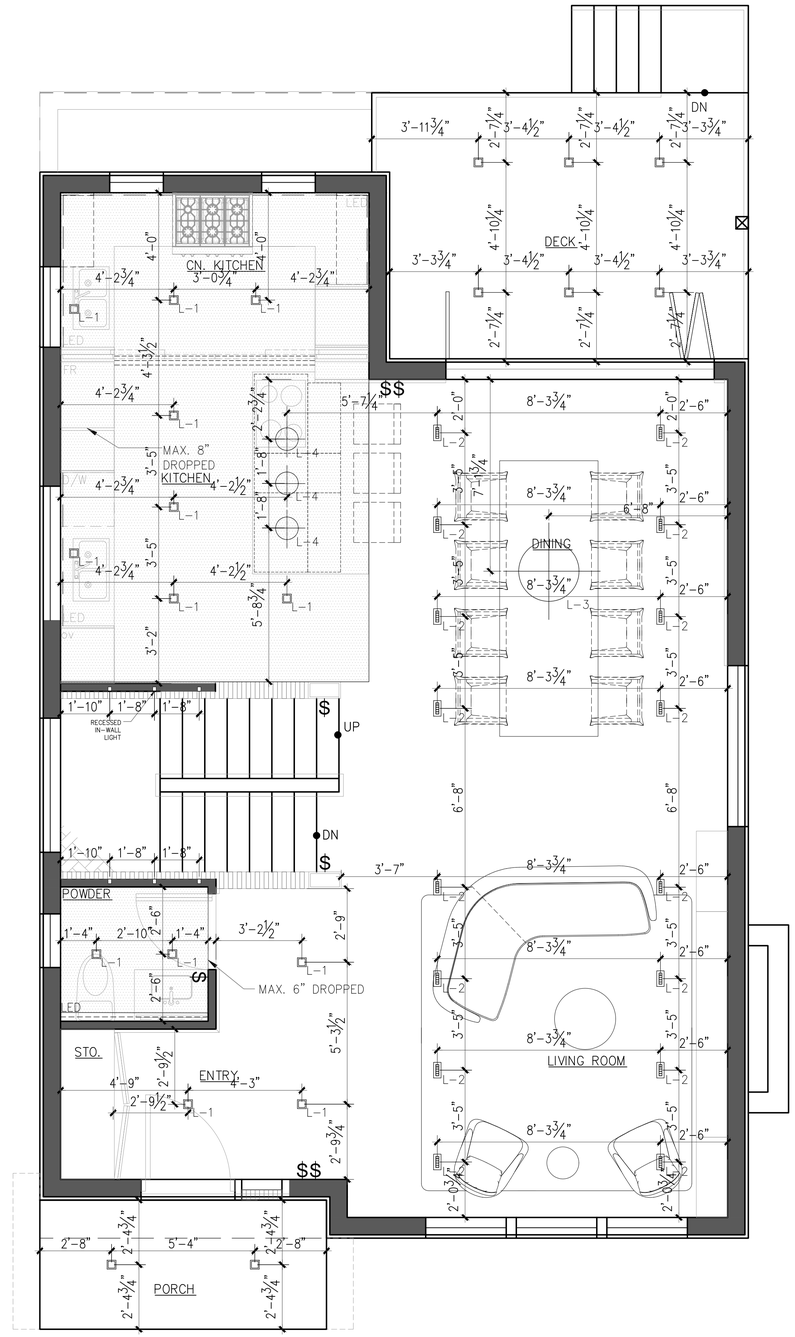


1 ID1.06 REFLECTED CEILING PLAN – MAIN FLOOR
Scale: 3/8" = 1'-0"

| ITEM | DESCRIPTION | DATE |
|---|---|---|

1. All design concepts, drawings, specifications, millwork and details drawn or represented herein are the property of Angela Yuran Jl and no part of the same shall be reproduced, copied, disclosed or used in any manner other than for the specific project shown without the written consent of the designer.
2. All work shall conform with local and Provincial Building Code latest edition.
3. All dimensions and conditions shall be verified on site and any discrepancies shall be reported to the designer for clarification before proceeding with construction.

DRAWING TITLE: REFLECTED CEILING PLAN – MAIN FLOOR

PROJECT:

PROJECT NO.: –

CONTACT: –

SCALE:

DRAWING NO.: ID1.06

DATE: 0000/00/00

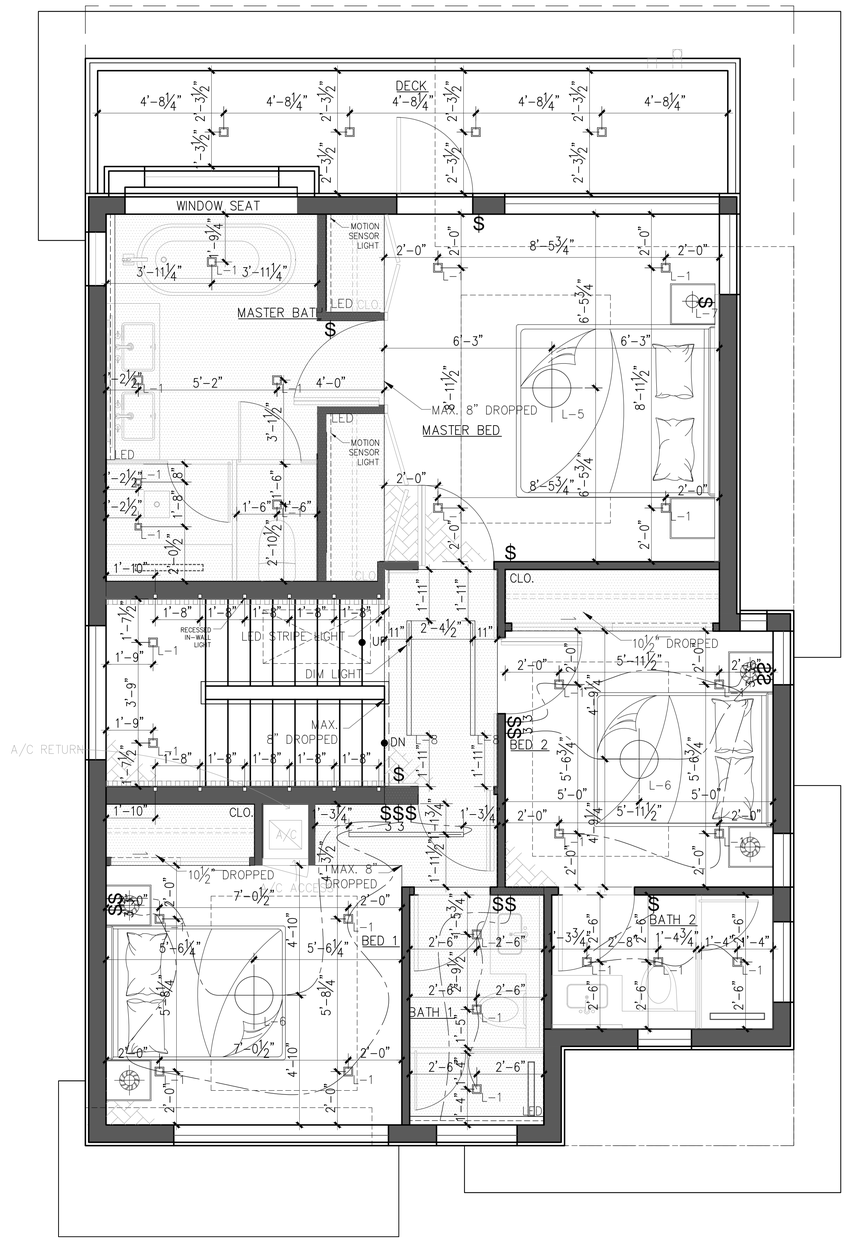


1 ID1.07 REFLECTED CEILING PLAN – UPPER FLOOR
Scale: 3/8" = 1'-0"

CEILING TYPE LEGEND

DROPPED CEILING

| ITEM | DESCRIPTION | DATE |
|---|---|---|

1. All design concepts, drawings, specifications, millwork and details drawn or represented herein are the property of Angela Yuron Ji and no part of the same shall be reproduced, copied, disclosed or used in any manner other than for the specific project shown without the written consent of the designer.
2. All work shall conform with local and Provincial Building Code latest edition.
3. All dimensions and conditions shall be verified on site and any discrepancies shall be reported to the designer for clarification before proceeding with construction.

DRAWING TITLE: REFLECTED CEILING PLAN – UPPER FLOOR

PROJECT:

PROJECT NO.: –

CONTACT: –

SCALE:

DRAWING NO.: ID1.07

DATE: 0000/00/00

CEILING TYPE LEGEND

DROPPED CEILING

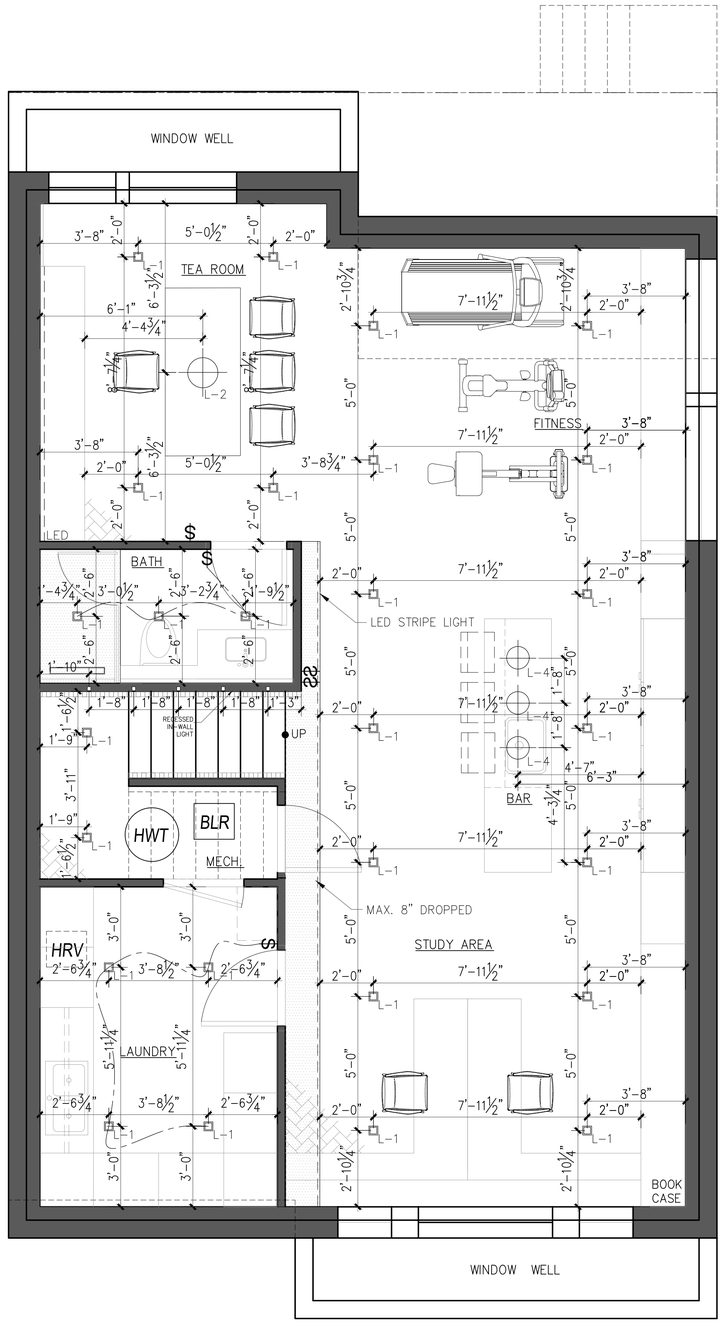


1 ID1.08 REFLECTED CEILING PLAN – BASEMENT
Scale: 3/8" = 1'-0"

| ITEM | DESCRIPTION | DATE |
|---|---|---|

1. All design concepts, drawings, specifications, millwork and details drawn or represented herein are the property of Angela Yuran Ji and no part of the same shall be reproduced, copied, disclosed or used in any manner other than for the specific project shown without the written consent of the designer.
2. All work shall conform with local and Provincial Building Code latest edition.
3. All dimensions and conditions shall be verified on site and any discrepancies shall be reported to the designer for clarification before proceeding with construction.

DRAWING TITLE: REFLECTED CEILING PLAN – BASEMENT

PROJECT:

PROJECT NO.: –

CONTACT: –

SCALE:

DRAWING NO.: ID1.08

DATE: 0000/00/00

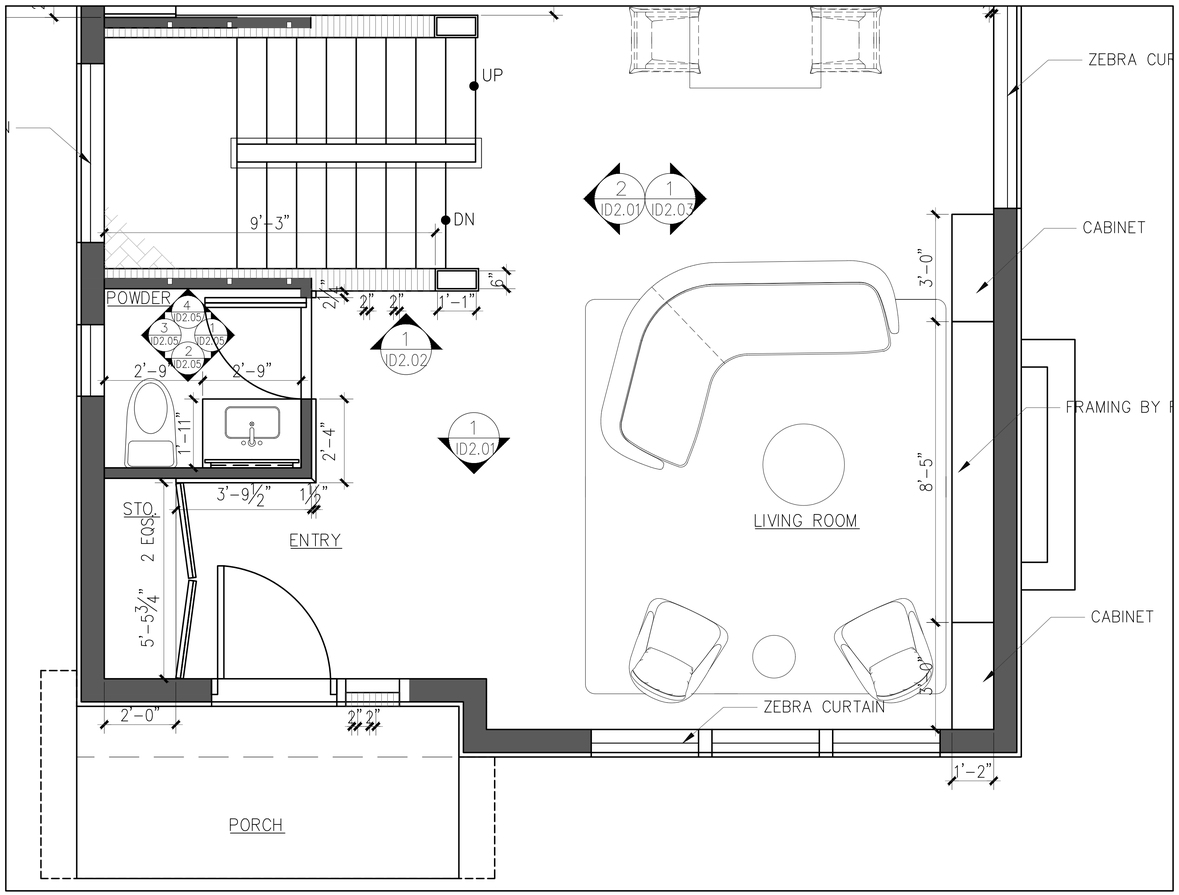


## PLAN – ENTRY & LIVING ROOM

ID1.03 Scale: 1/2" = 1'-0"

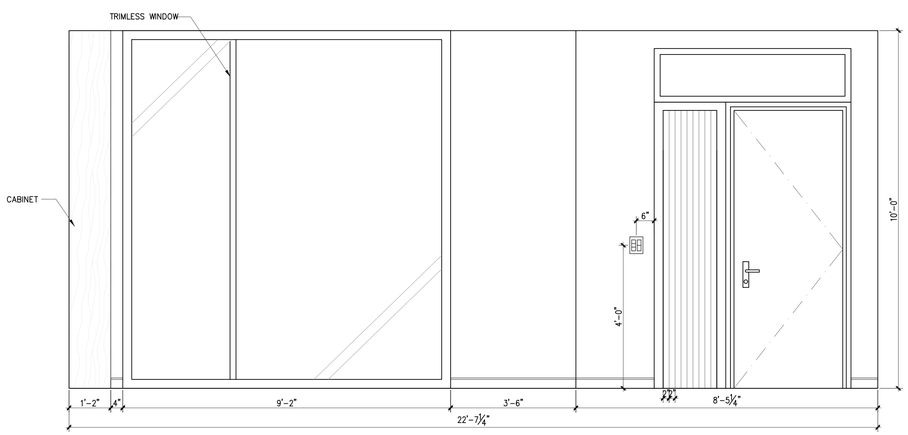


## 1 ELEVATION – ENTRY & LIVING ROOM

ID1.03 Scale: 1/2" = 1'-0"

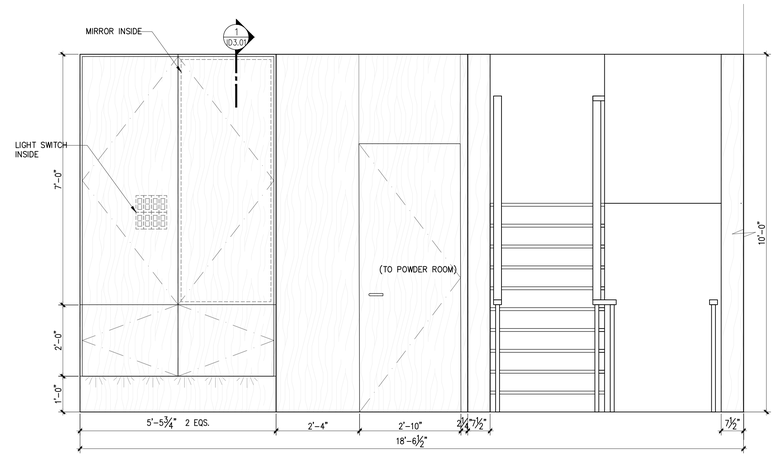


## 2 ELEVATION – ENTRY & STAIR

ID1.03 Scale: 1/2" = 1'-0"

| ITEM | DESCRIPTION | DATE |
|---|---|---|


1. All design concepts, drawings, specifications, millwork and details drawn or represented herein are the property of Angelo Yuran ,& and no part of the same shall be reproduced, copied, disclosed or used in any manner other than for the specific project shown without the written consent of the designer.

2. All work shall conform with local and Provincial Building Code latest edition.
3. All dimensions and conditions shall be verified on site and any discrepancies shall be reported to the designer for clarification before proceeding with construction.

DRAWING TITLE:

PROJECT:

PROJECT NO.: –

CONTACT: –

SCALE:

DRAWING NO.: ID2.01

DATE: 0000/00/00

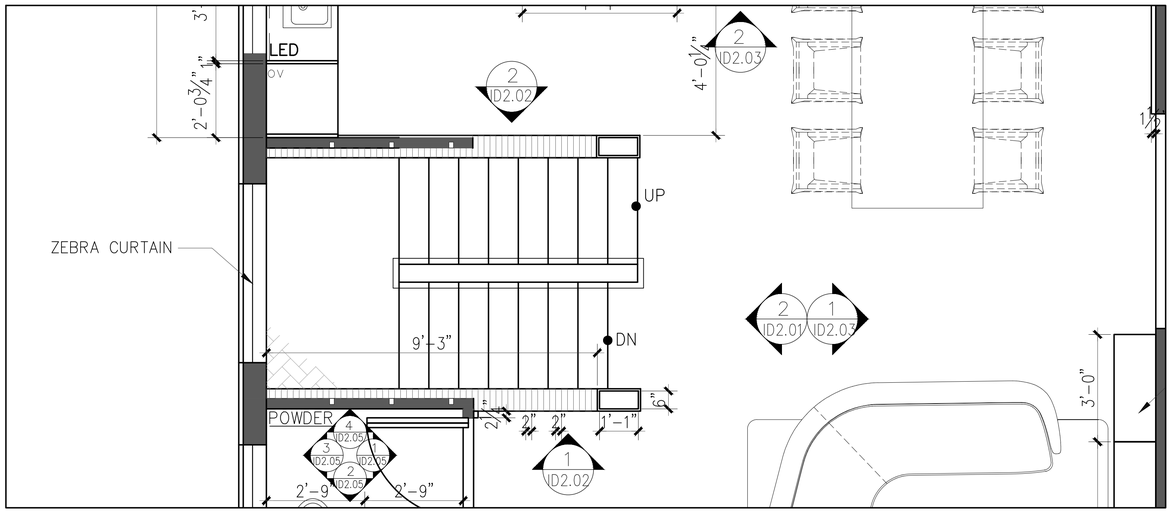


— PLAN — STAIR
ID1.03 Scale: 1/2" = 1'-0"

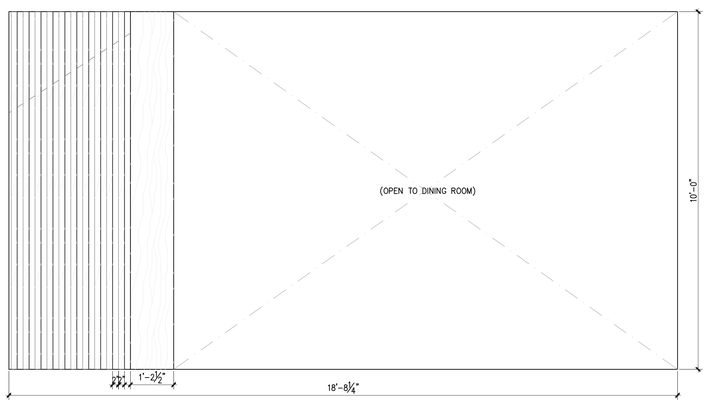


1 ELEVATION — STAIR
ID1.03 Scale: 1/2" = 1'-0"

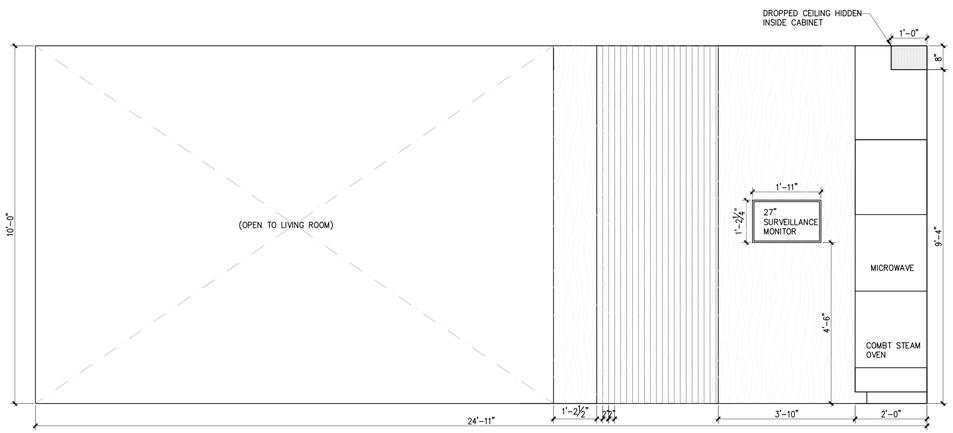


2 ELEVATION — STAIR
ID1.03 Scale: 1/2" = 1'-0"

| ITEM | DESCRIPTION | DATE |
|---|---|---|

1. All design concepts, drawings, specifications, millwork and details drawn or represented herein are the property of Angelo Yuran ⅈ and no part of the same shall be reproduced, copied, disclosed or used in any manner other than for the specific project shown without the written consent of the designer.
2. All work shall conform with local and Provincial Building Code latest edition.
3. All dimensions and conditions shall be verified on site and any discrepancies shall be reported to the designer for clarification before proceeding with construction.

DRAWING TITLE:

PROJECT:

PROJECT NO.:
—

CONTACT:
—

SCALE:

DRAWING NO.:

DATE:
0000/00/00

ID2.02

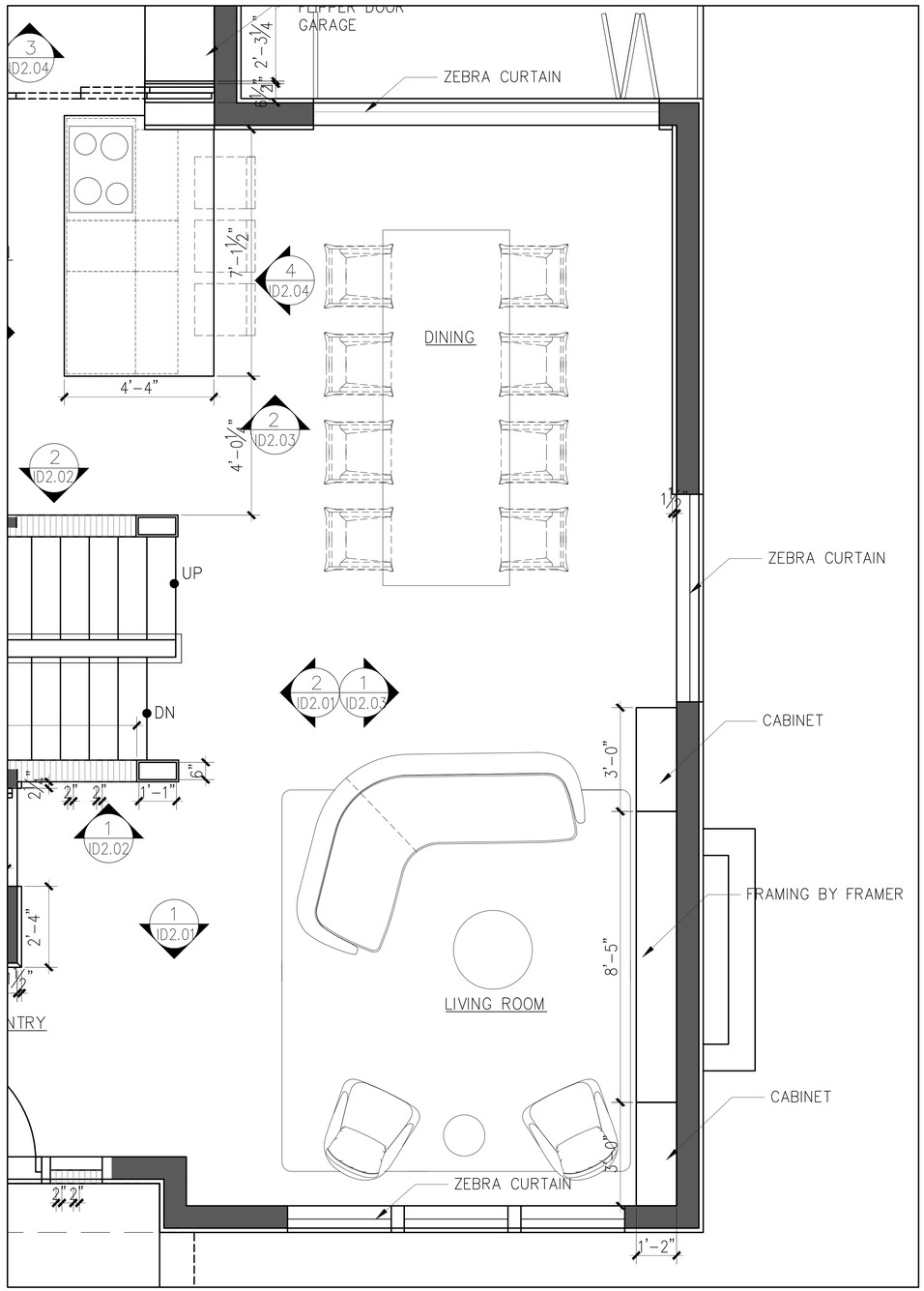


— ID1.03 PLAN – LIVING ROOM & DINING ROOM
Scale: 1/2" = 1'-0"

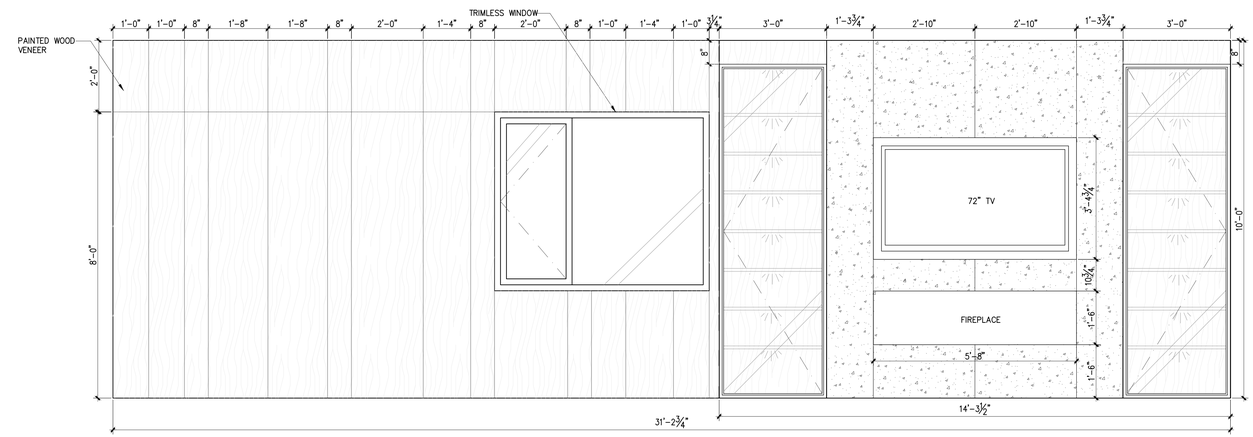


1 ID1.03 ELEVATION – LIVING ROOM & DINING ROOM
Scale: 1/2" = 1'-0"

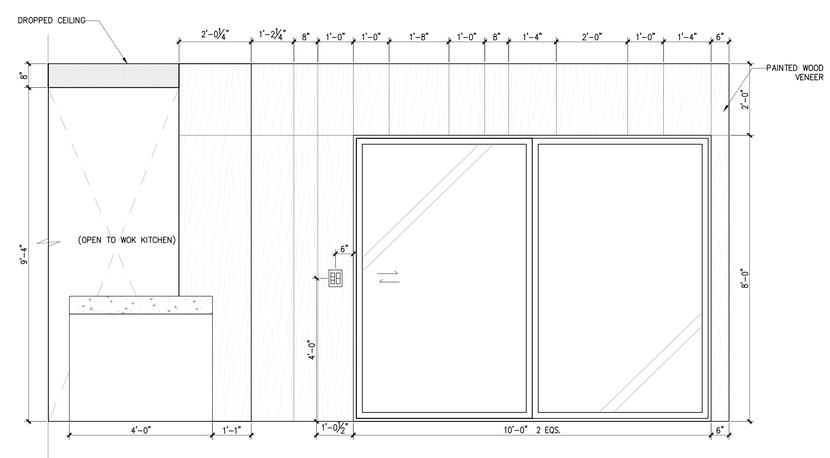


2 ID1.03 ELEVATION – DINING ROOM
Scale: 1/2" = 1'-0"

| ITEM | DESCRIPTION | DATE |
|---|---|---|

1. All design concepts, drawings, specifications, millwork and details drawn or represented herein are the property of Angela Yuran JI and no part of the same shall be reproduced, copied, disclosed or used in any manner other than for the specific project shown without the written consent of the designer.
2. All work shall conform with local and Provincial Building Code latest edition.
3. All dimensions and conditions shall be verified on site and any discrepancies shall be reported to the designer for clarification before proceeding with construction.

DRAWING TITLE:

PROJECT:

PROJECT NO.:
—

CONTACT:
—

SCALE:

DRAWING NO.:
ID2.03

DATE:
0000/00/00

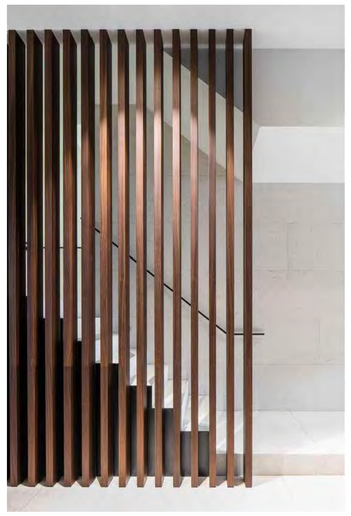

| ITEM | DESCRIPTION | DATE |
|---|---|---|


1. All design concepts, drawings, specifications, millwork and details drawn or represented herein are the property of Angela Yuran JI and no part of the same shall be reproduced, copied, disclosed or used in any manner other than for the specific project shown without the written consent of the designer.

2. All work shall conform with local and Provincial Building Code latest edition.
3. All dimensions and conditions shall be verified on site and any discrepancies shall be reported to the designer for clarification before proceeding with construction.

DRAWING TITLE:

PROJECT:

PROJECT NO.:
—

CONTACT:
—

SCALE:

DRAWING NO.:

DATE:
0000/00/00

REF 1

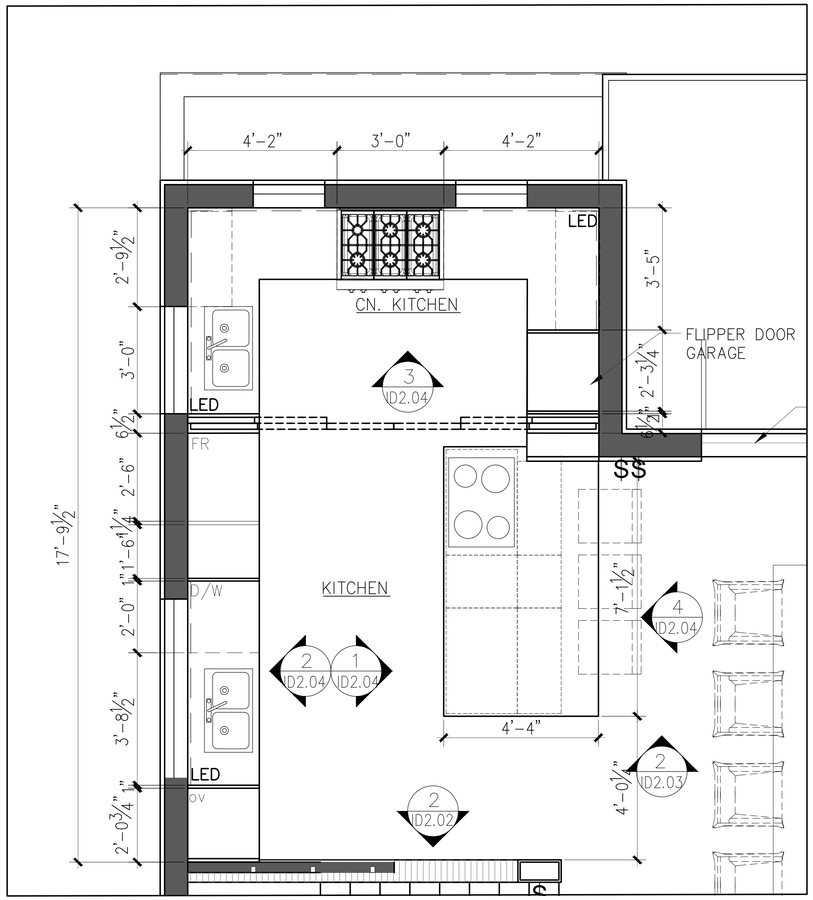


PLAN – KITCHEN
ID1.03 Scale: 1/2" = 1'-0"

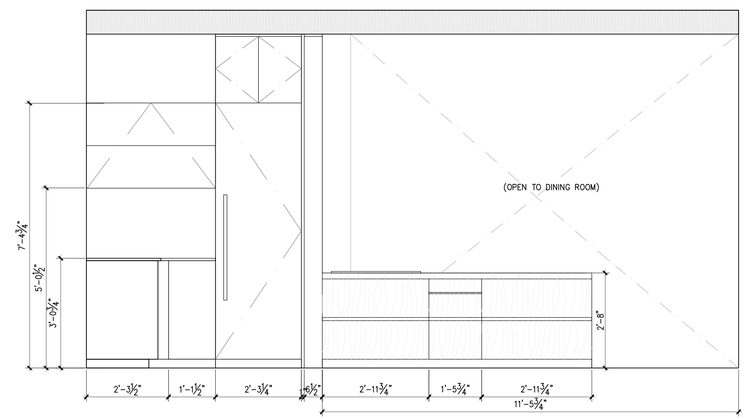


1 ELEVATION – KITCHEN
ID1.03 Scale: 1/2" = 1'-0"

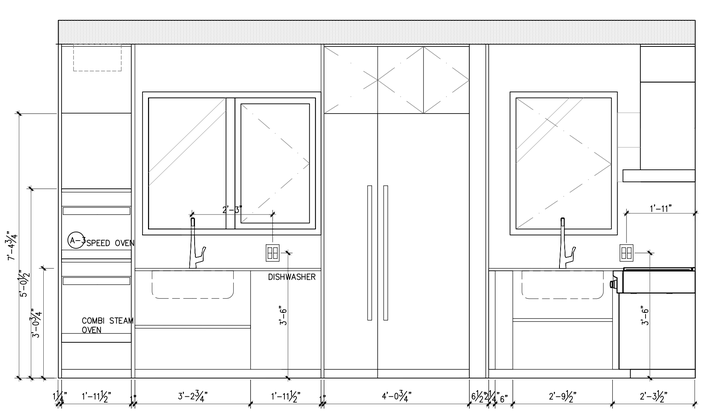


2 ELEVATION – KITCHEN
ID1.03 Scale: 1/2" = 1'-0"

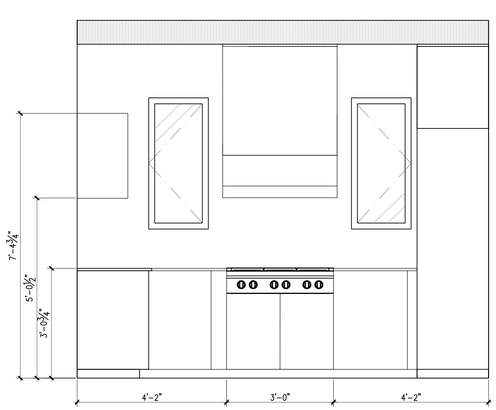


3 ELEVATION – KITCHEN
ID1.03 Scale: 1/2" = 1'-0"

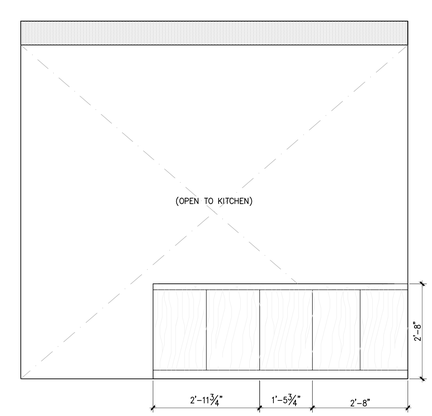


4 ELEVATION – KITCHEN
ID1.03 Scale: 1/2" = 1'-0"

| ITEM | DESCRIPTION | DATE |
|---|---|---|


1. All design concepts, drawings, specifications, millwork and details drawn or represented herein are the property of Angela Yuran Δ and no part of the same shall be reproduced, copied, disclosed or used in any manner other than for the specific project shown without the written consent of the designer.

2. All work shall conform with local and Provincial Building Code latest edition.
3. All dimensions and conditions shall be verified on site and any discrepancies shall be reported to the designer for clarification before proceeding with construction.

DRAWING TITLE:

PROJECT:

PROJECT NO.:
–

CONTACT:
–

SCALE:

DRAWING NO.:
ID2.04

DATE:
0000/00/00

| ITEM | DESCRIPTION | DATE |
|---|---|---|

1. All design concepts, drawings, specifications, millwork and details drawn or represented herein are the property of Angelo Yuran Jr and no part of the same shall be reproduced, copied, disclosed or used in any manner other than for the specific project shown without the written consent of the designer.
2. All work shall conform with local and Provincial Building Code latest edition.
3. All dimensions and conditions shall be verified on site and any discrepancies shall be reported to the designer for clarification before proceeding with construction.

DRAWING TITLE:

PROJECT:

PROJECT NO.:
—

CONTACT:
—

SCALE:

DRAWING NO.:

DATE:
0000/00/00

REF 2

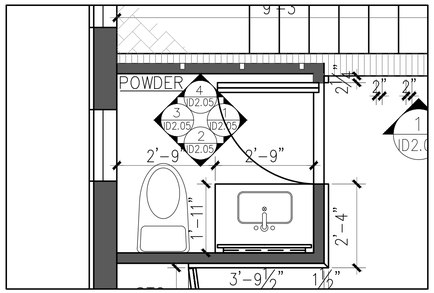


– ID1.03 PLAN – POWDER
Scale: 1/2" = 1'-0"

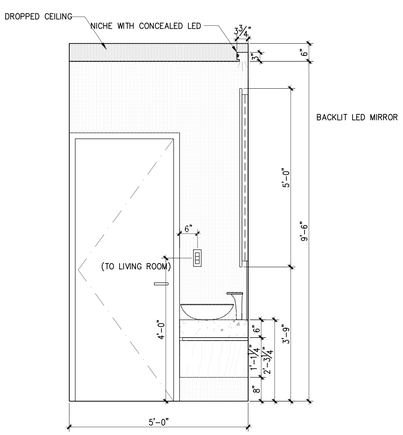


1 ID1.03 ELEVATION – POWDER
Scale: 1/2" = 1'-0"

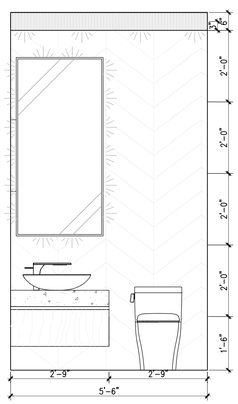


2 ID1.03 ELEVATION – POWDER
Scale: 1/2" = 1'-0"

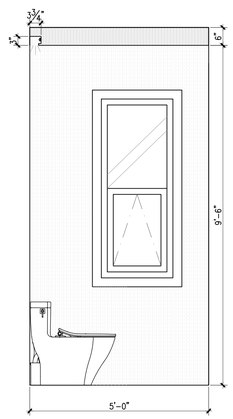


3 ID1.03 ELEVATION – POWDER
Scale: 1/2" = 1'-0"

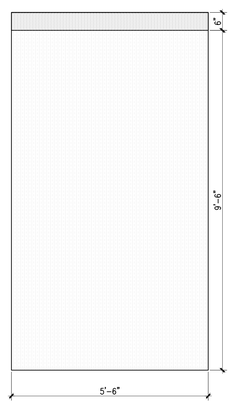


4 ID1.03 ELEVATION – POWDER
Scale: 1/2" = 1'-0"

| ITEM | DESCRIPTION | DATE |
|---|---|---|

1. All design concepts, drawings, specifications, millwork and details drawn or represented herein are the property of Angelo Yuran ⅃ and no part of the same shall be reproduced, copied, disclosed or used in any manner other than for the specific project shown without the written consent of the designer.
2. All work shall conform with local and Provincial Building Code latest edition.
3. All dimensions and conditions shall be verified on site and any discrepancies shall be reported to the designer for clarification before proceeding with construction.

DRAWING TITLE:

PROJECT:

PROJECT NO.:
–

CONTACT:
–

SCALE:

DRAWING NO.:

DATE:
0000/00/00

ID2.05

| ITEM | DESCRIPTION | DATE |
|---|---|---|

1. All design concepts, drawings, specifications, millwork and details drawn or represented herein are the property of Angela Yuran Ji and no part of the same shall be reproduced, copied, disclosed or used in any manner other than for the specific project shown without the written consent of the designer.
2. All work shall conform with local and Provincial Building Code latest edition.
3. All dimensions and conditions shall be verified on site and any discrepancies shall be reported to the designer for clarification before proceeding with construction.

DRAWING TITLE:

PROJECT:

PROJECT NO.:
—

CONTACT:
—

SCALE:

DRAWING NO.:

DATE:
0000/00/00

REF 3

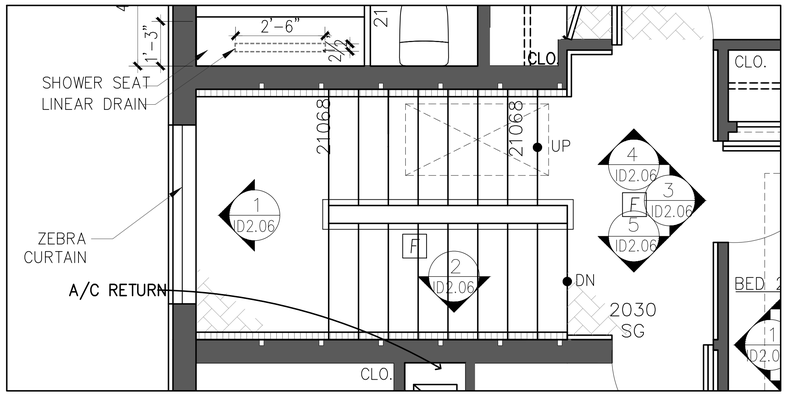


– / ID1.04 PLAN – UPPER FLOOR STAIR & HALL
Scale: 1/2" = 1'-0"

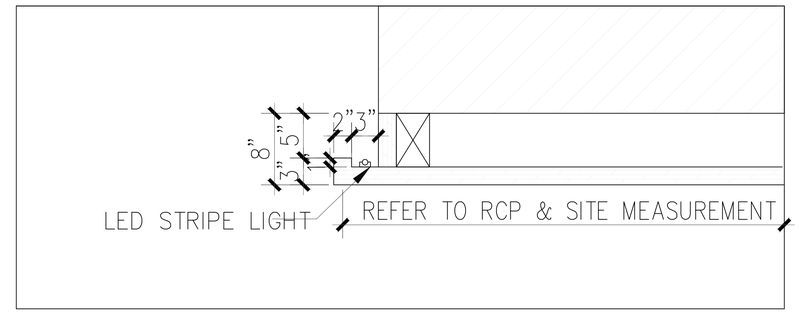


6 / ID2.06 DETAIL – DROPPED CEILING
Scale: 1-1/2" = 1'-0"

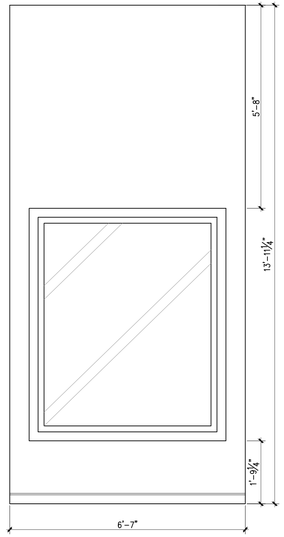


1 / ID1.04 ELEVATION – STAIRWAY LANDING
Scale: 1/2" = 1'-0"

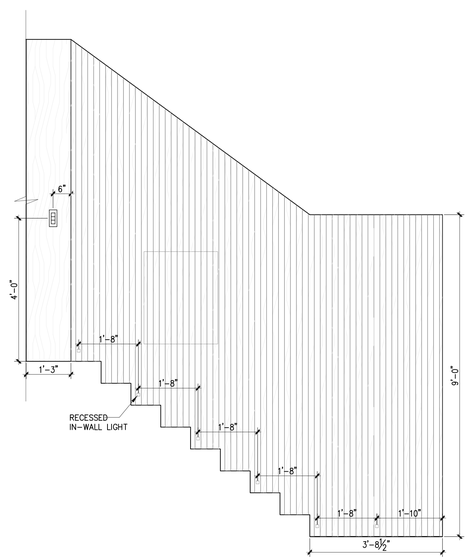


2 / ID1.04 ELEVATION – STAIR
Scale: 1/2" = 1'-0"

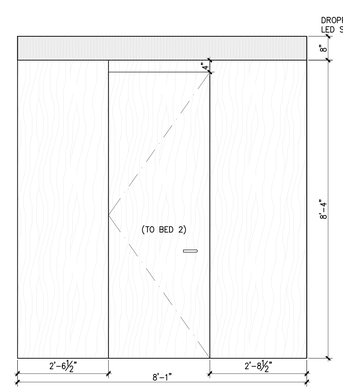


3 / ID1.04 ELEVATION – HALL
Scale: 1/2" = 1'-0"

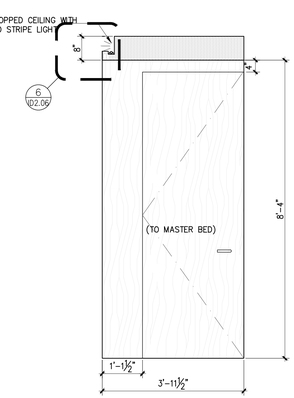


4 / ID1.04 ELEVATION – HALL
Scale: 1/2" = 1'-0"

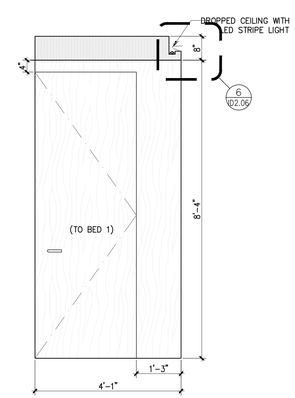


5 / ID1.04 ELEVATION – HALL
Scale: 1/2" = 1'-0"

| ITEM | DESCRIPTION | DATE |
|---|---|---|


1. All design concepts, drawings, specifications, millwork and details drawn or represented herein are the property of Angela Yuran JL and no part of the same shall be reproduced, copied, disclosed or used in any manner other than for the specific project shown without the written consent of the designer.

2. All work shall conform with local and Provincial Building Code latest edition.
3. All dimensions and conditions shall be verified on site and any discrepancies shall be reported to the designer for clarification before proceeding with construction.

DRAWING TITLE:

PROJECT:

PROJECT NO.:
–

CONTACT:
–

SCALE:

DRAWING NO.:
ID2.06

DATE:
0000/00/00

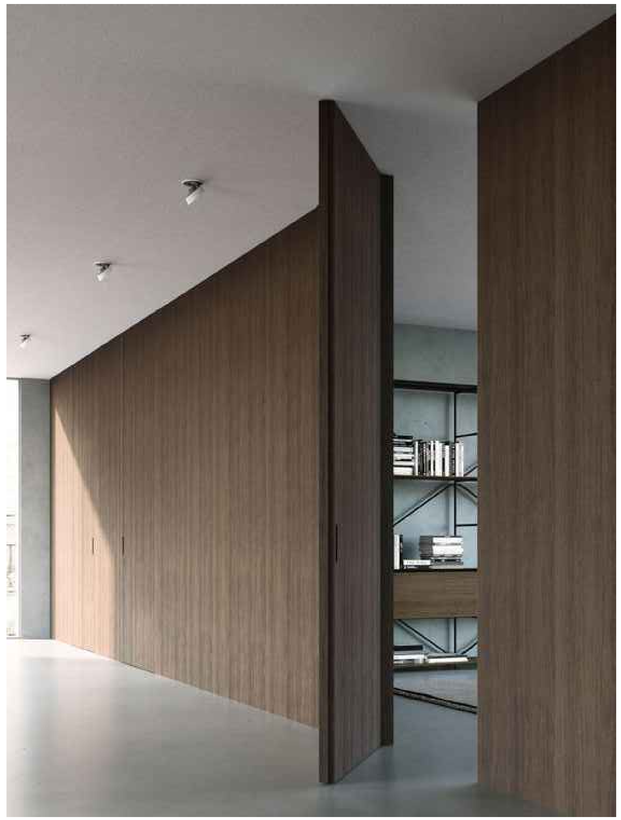

| ITEM | DESCRIPTION | DATE |
|---|---|---|

1. All design concepts, drawings, specifications, millwork and details drawn or represented herein are the property of Angela Yuran JI and no part of the same shall be reproduced, copied, disclosed or used in any manner other than for the specific project shown without the written consent of the designer.
2. All work shall conform with local and Provincial Building Code latest edition.
3. All dimensions and conditions shall be verified on site and any discrepancies shall be reported to the designer for clarification before proceeding with construction.

DRAWING TITLE:

PROJECT:

PROJECT NO.:
—

CONTACT:
—

SCALE:

DRAWING NO.:

DATE:
0000/00/00

REF 4

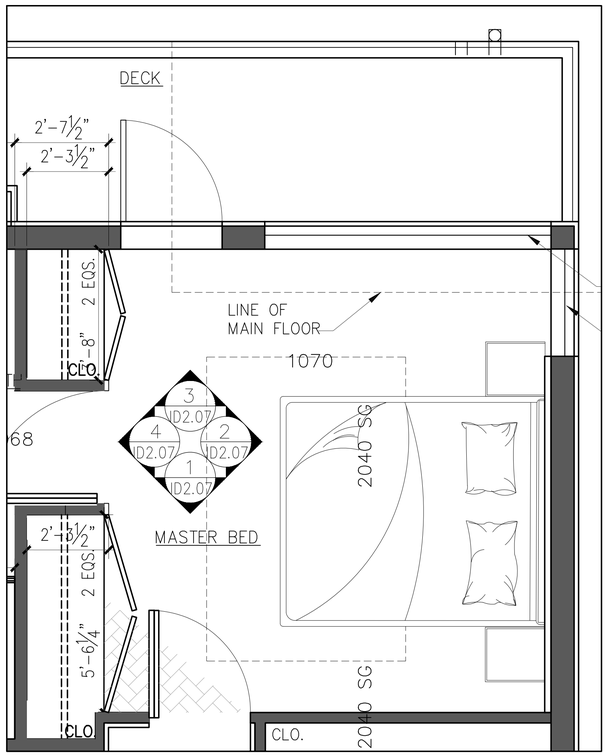


— PLAN – MASTER BED
ID1.04 Scale: 1/2" = 1'-0"

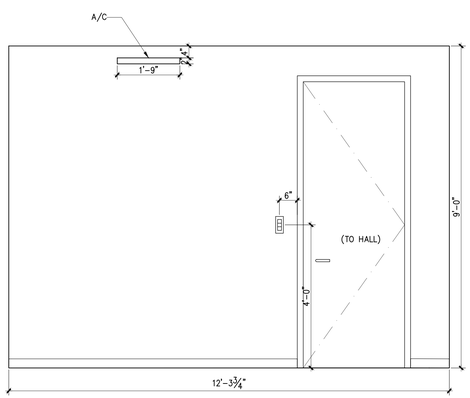


1 ELEVATION – MASTER BED
ID1.04 Scale: 1/2" = 1'-0"

2 ELEVATION – MASTER BED
ID1.04 Scale: 1/2" = 1'-0"

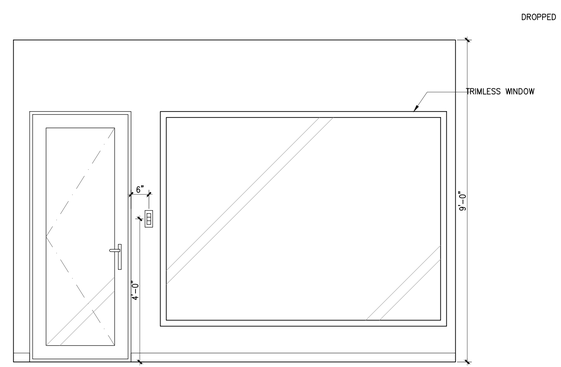


3 ELEVATION – MASTER BED
ID1.04 Scale: 1/2" = 1'-0"

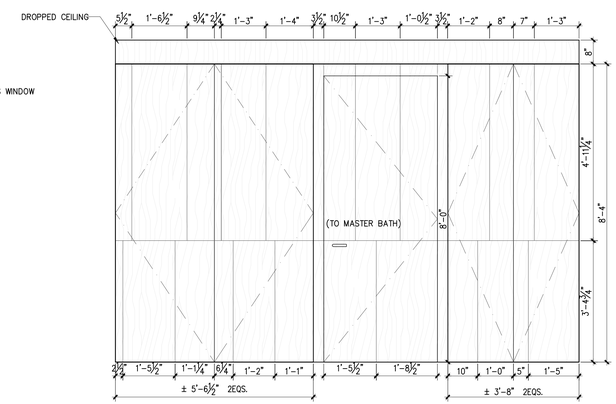


4 ELEVATION – MASTER BED
ID1.04 Scale: 1/2" = 1'-0"

| ITEM | DESCRIPTION | DATE |
|---|---|---|

1. All design concepts, drawings, specifications, millwork and details drawn or represented herein are the property of Angela Yuran Ji and no part of the same shall be reproduced, copied, disclosed or used in any manner other than for the specific project shown without the written consent of the designer.
2. All work shall conform with local and Provincial Building Code latest edition.
3. All dimensions and conditions shall be verified on site and any discrepancies shall be reported to the designer for clarification before proceeding with construction.

DRAWING TITLE:

PROJECT:

PROJECT NO.:
—

CONTACT:
—

SCALE:

DRAWING NO.:
ID2.07

DATE:
0000/00/00

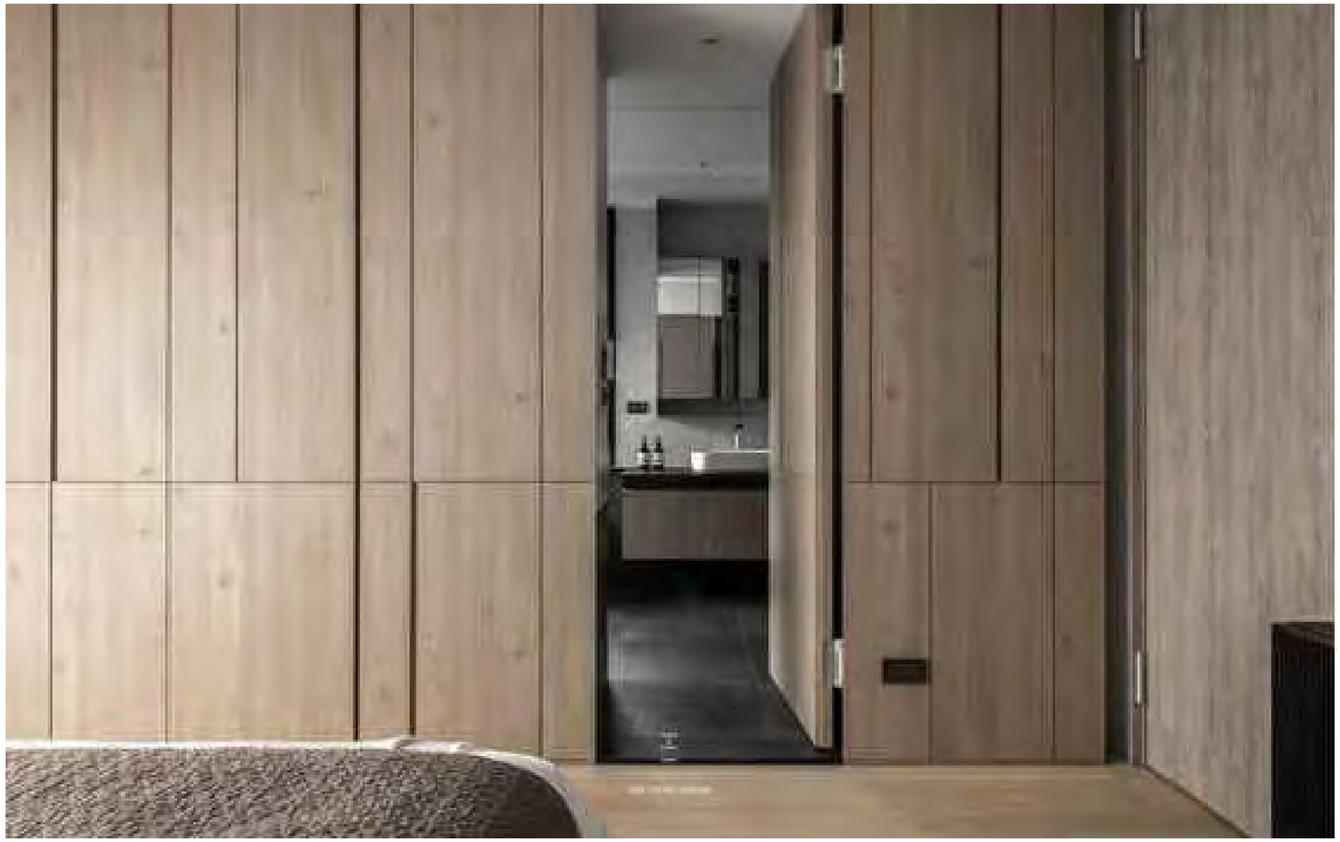

| ITEM | DESCRIPTION | DATE |
|---|---|---|

1. All design concepts, drawings, specifications, millwork and details drawn or represented herein are the property of Angela Yuran Jl and no part of the same shall be reproduced, copied, disclosed or used in any manner other than for the specific project shown without the written consent of the designer.
2. All work shall conform with local and Provincial Building Code latest edition.
3. All dimensions and conditions shall be verified on site and any discrepancies shall be reported to the designer for clarification before proceeding with construction.

DRAWING TITLE:

PROJECT:

PROJECT NO.:
—

CONTACT:
—

SCALE:

DRAWING NO.:

DATE:
0000/00/00

REF 5

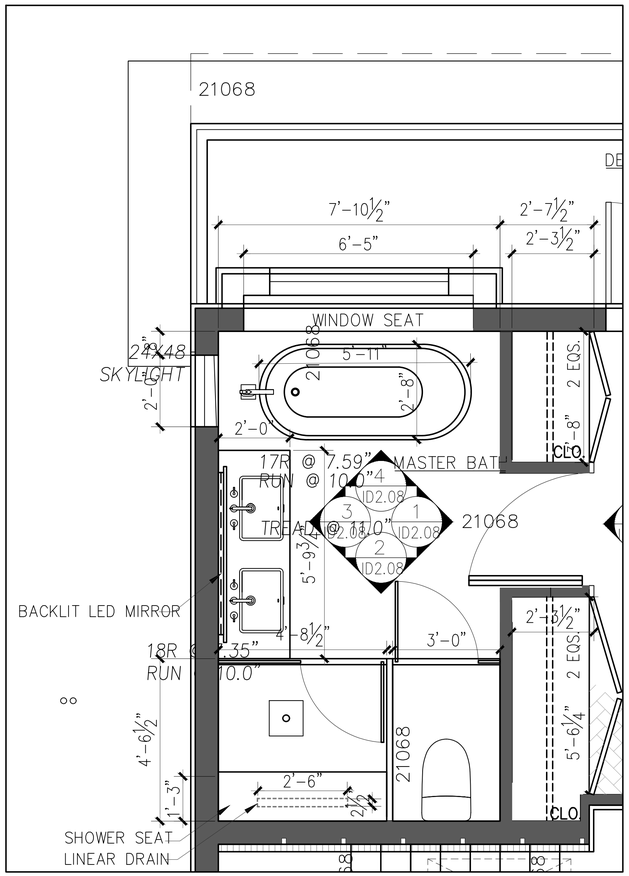


1 / ID1.04 PLAN – MASTER BATH
Scale: 1/2" = 1'-0"

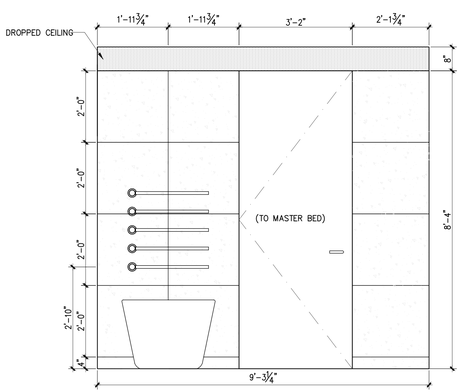


1 / ID1.04 ELEVATION – MASTER BATH
Scale: 1/2" = 1'-0"

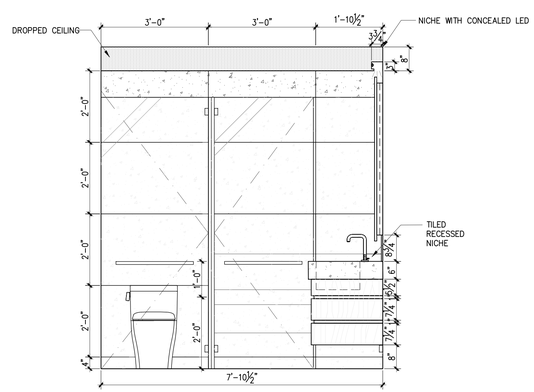


2 / ID1.04 ELEVATION – MASTER BATH
Scale: 1/2" = 1'-0"

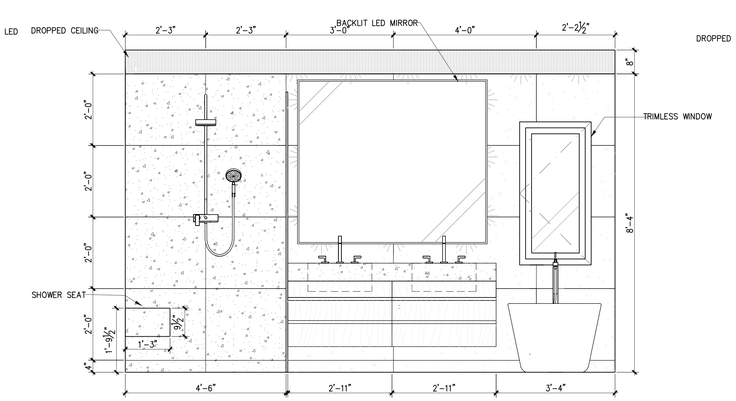


3 / ID1.04 ELEVATION – MASTER BATH
Scale: 1/2" = 1'-0"

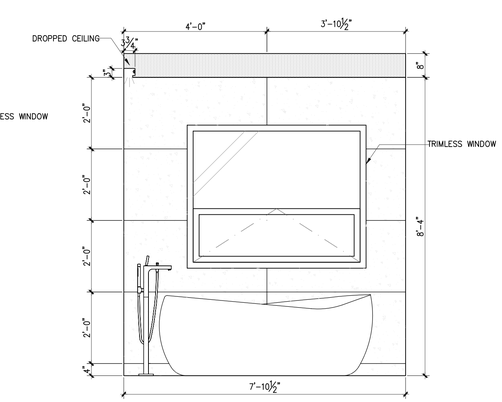


4 / ID1.04 ELEVATION – MASTER BATH
Scale: 1/2" = 1'-0"

| ITEM | DESCRIPTION | DATE |
|---|---|---|


1. All design concepts, drawings, specifications, millwork and details drawn or represented herein are the property of Angelo Yuran ⓒ and no part of the same shall be reproduced, copied, disclosed or used in any manner other than for the specific project shown without the written consent of the designer.

2. All work shall conform with local and Provincial Building Code latest edition.
3. All dimensions and conditions shall be verified on site and any discrepancies shall be reported to the designer for clarification before proceeding with construction.

DRAWING TITLE:

PROJECT:

PROJECT NO.:
–

CONTACT:
–

SCALE:

DRAWING NO.:

DATE:
0000/00/00

ID2.08

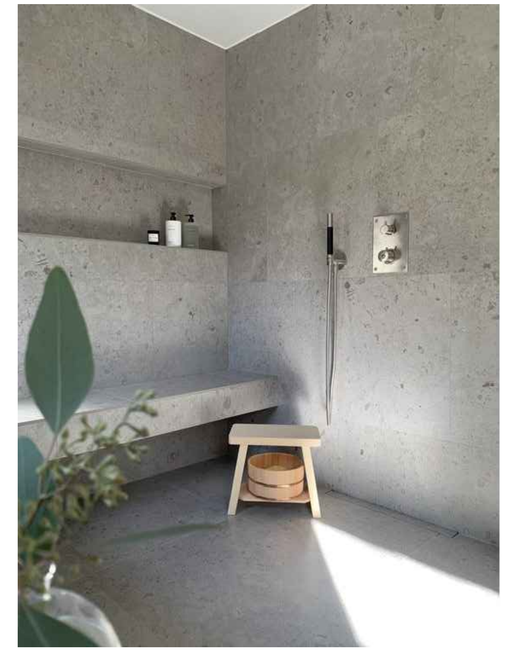

| ITEM | DESCRIPTION | DATE |
|---|---|---|

1. All design concepts, drawings, specifications, millwork and details drawn or represented herein are the property of Angela Yuran Jl and no part of the same shall be reproduced, copied, disclosed or used in any manner other than for the specific project shown without the written consent of the designer.
2. All work shall conform with local and Provincial Building Code latest edition.
3. All dimensions and conditions shall be verified on site and any discrepancies shall be reported to the designer for clarification before proceeding with construction.

DRAWING TITLE:

PROJECT:

PROJECT NO.:
—

CONTACT:
—

SCALE:

DRAWING NO.:

DATE:
0000/00/00

REF 6

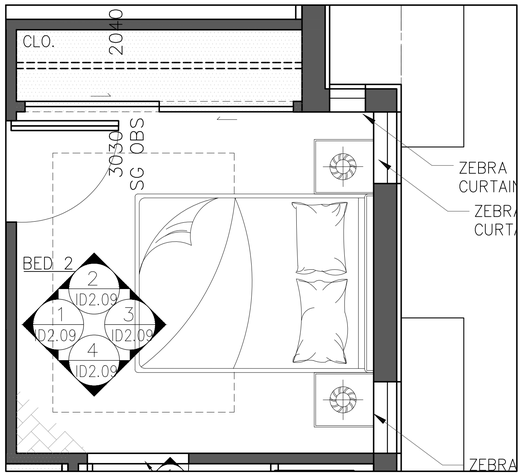


– / ID1.04 PLAN – BED 2
Scale: 1/2" = 1'–0"

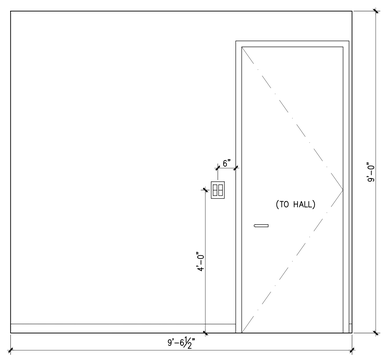


1 / ID1.04 ELEVATION – BED 2
Scale: 1/2" = 1'–0"

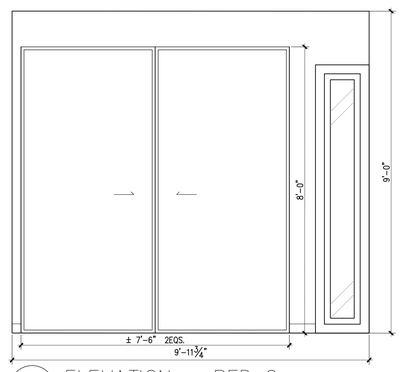


2 / ID1.04 ELEVATION – BED 2
Scale: 1/2" = 1'–0"

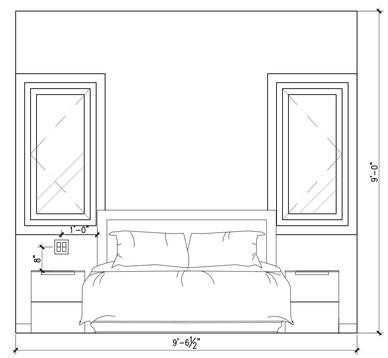


3 / ID1.04 ELEVATION – BED 2
Scale: 1/2" = 1'–0"

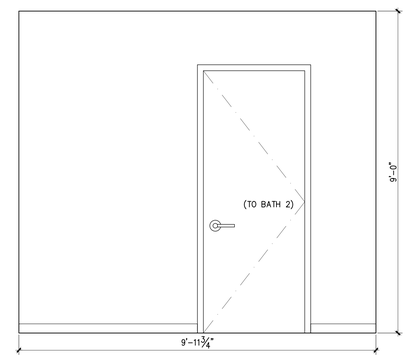


4 / ID1.04 ELEVATION – BED 2
Scale: 1/2" = 1'–0"

| ITEM | DESCRIPTION | DATE |
|---|---|---|

1. All design concepts, drawings, specifications, millwork and details drawn or represented herein are the property of Angelo Yuran ⓒ and no part of the same shall be reproduced, copied, disclosed or used in any manner other than for the specific project shown without the written consent of the designer.
2. All work shall conform with local and Provincial Building Code latest edition.
3. All dimensions and conditions shall be verified on site and any discrepancies shall be reported to the designer for clarification before proceeding with construction.

DRAWING TITLE:

PROJECT:

PROJECT NO.:
–

CONTACT:
–

SCALE:

DRAWING NO.:

DATE:
0000/00/00

ID2.09

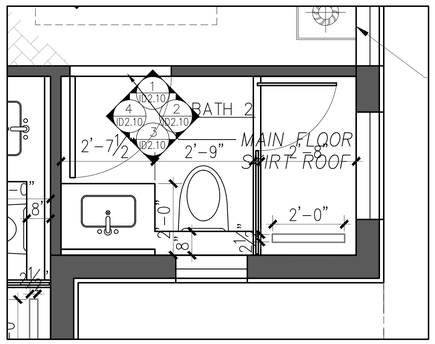


– / ID1.04 PLAN – BATH 2
Scale: 1/2" = 1'-0"

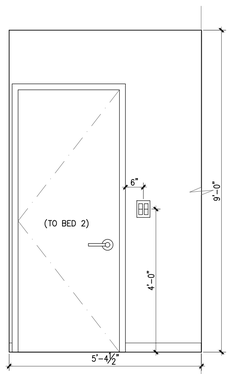


1 / ID1.04 ELEVATION – BATH 2
Scale: 1/2" = 1'-0"

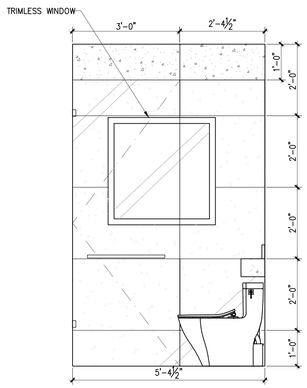


2 / ID1.04 ELEVATION – BATH 2
Scale: 1/2" = 1'-0"

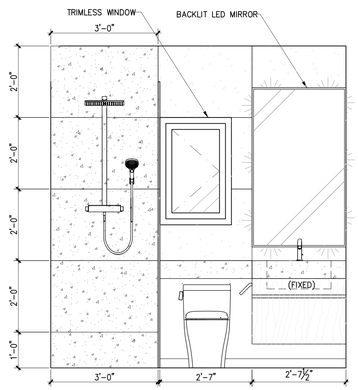


3 / ID1.04 ELEVATION – BATH 2
Scale: 1/2" = 1'-0"

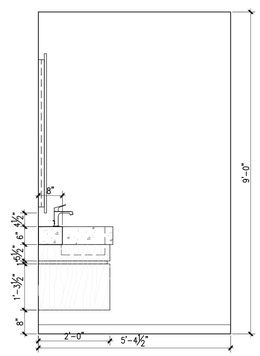


4 / ID1.04 ELEVATION – BATH 2
Scale: 1/2" = 1'-0"

| ITEM | DESCRIPTION | DATE |
|---|---|---|

1. All design concepts, drawings, specifications, millwork and details drawn or represented herein are the property of Angelo Yuran .ß and no part of the same shall be reproduced, copied, disclosed or used in any manner other than for the specific project shown without the written consent of the designer.
2. All work shall conform with local and Provincial Building Code latest edition.
3. All dimensions and conditions shall be verified on site and any discrepancies shall be reported to the designer for clarification before proceeding with construction.

DRAWING TITLE:

PROJECT:

PROJECT NO.:
–

CONTACT:
–

SCALE:

DRAWING NO.:

DATE:
0000/00/00

ID2.10

| ITEM | DESCRIPTION | DATE |
|---|---|---|

1. All design concepts, drawings, specifications, millwork and details drawn or represented herein are the property of Angelo Yuran ⓒ and no part of the same shall be reproduced, copied, disclosed or used in any manner other than for the specific project shown without the written consent of the designer.
2. All work shall conform with local and Provincial Building Code latest edition.
3. All dimensions and conditions shall be verified on site and any discrepancies shall be reported to the designer for clarification before proceeding with construction.

DRAWING TITLE:

PROJECT:

PROJECT NO.:
—

CONTACT:
—

SCALE:

DRAWING NO.:

DATE:
0000/00/00

REF 7

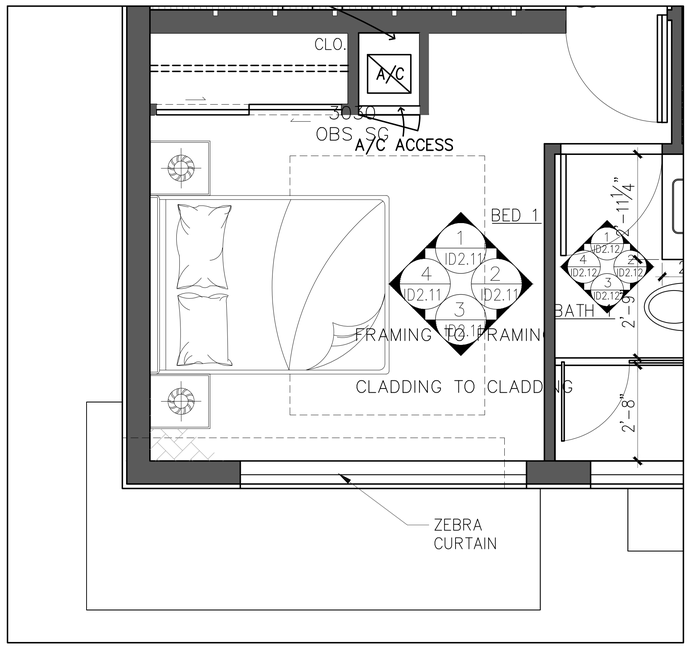


— / ID1.04 PLAN – BED 1
Scale: 1/2" = 1'-0"

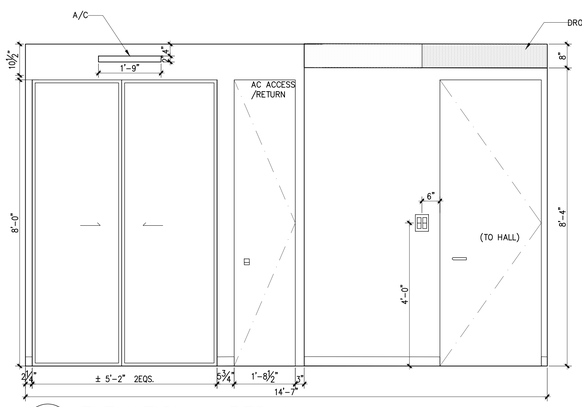


1 / ID1.04 ELEVATION – BED 1
Scale: 1/2" = 1'-0"

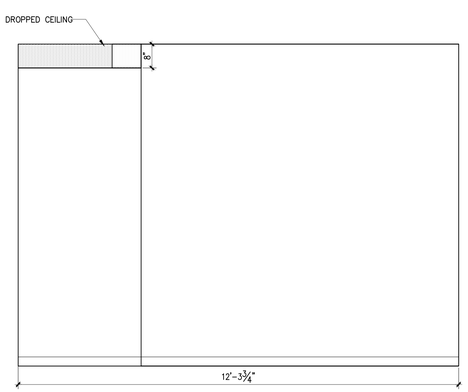


2 / ID1.04 ELEVATION – BED 1
Scale: 1/2 = 1'-0"

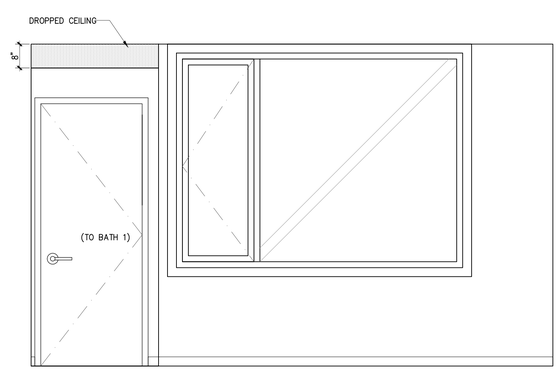


3 / ID1.04 ELEVATION – BED 1
Scale: 1/2" = 1'-0"

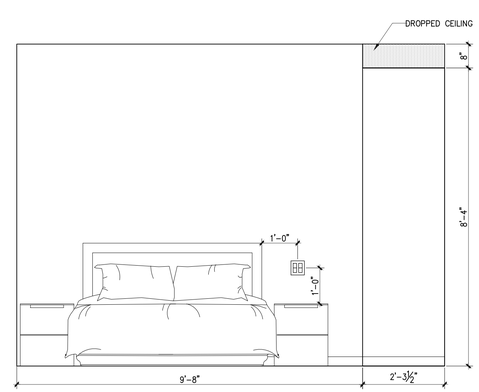


4 / ID1.04 ELEVATION – BED 1
Scale: 1/2" = 1'-0"

| ITEM | DESCRIPTION | DATE |
|---|---|---|


1. All design concepts, drawings, specifications, millwork and details drawn or represented herein are the property of Angelo Yuran & and no part of the same shall be reproduced, copied, disclosed or used in any manner other than for the specific project shown without the written consent of the designer.

2. All work shall conform with local and Provincial Building Code latest edition.
3. All dimensions and conditions shall be verified on site and any discrepancies shall be reported to the designer for clarification before proceeding with construction.

DRAWING TITLE:

PROJECT:

PROJECT NO.:
—

CONTACT:
—

SCALE:

DRAWING NO.:

DATE:
0000/00/00

ID2.11

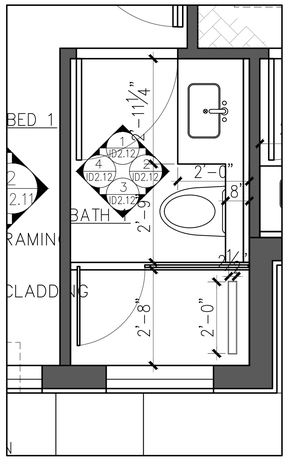


— PLAN — BATH 1
ID1.04 Scale: 1/2" = 1'-0"

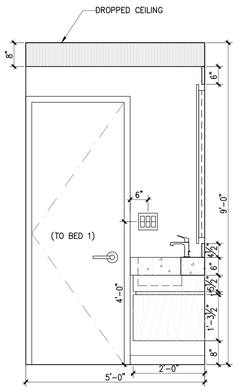


1 ID1.04 ELEVATION — BATH 1
Scale: 1/2" = 1'-0"

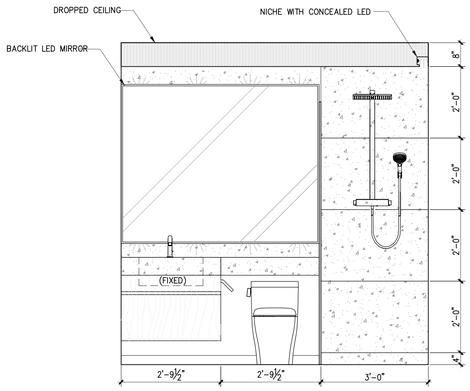


2 ID1.04 ELEVATION — BATH 1
Scale: 1/2" = 1'-0"

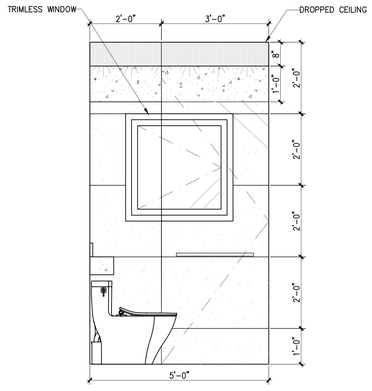


3 ID1.04 ELEVATION — BATH 1
Scale: 1/2" = 1'-0"

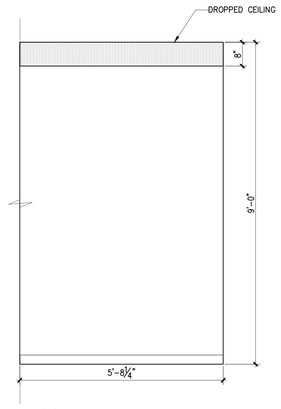


4 ID1.04 ELEVATION — BATH 1
Scale: 1/2" = 1'-0"

| ITEM | DESCRIPTION | DATE |
|---|---|---|


1. All design concepts, drawings, specifications, millwork and details drawn or represented herein are the property of Angelo Yuran ⅈ and no part of the same shall be reproduced, copied, disclosed or used in any manner other than for the specific project shown without the written consent of the designer.

2. All work shall conform with local and Provincial Building Code latest edition.
3. All dimensions and conditions shall be verified on site and any discrepancies shall be reported to the designer for clarification before proceeding with construction.

DRAWING TITLE:

PROJECT:

PROJECT NO.:
—

CONTACT:
—

SCALE:

DRAWING NO.:

DATE:
0000/00/00

ID2.12

| ITEM | DESCRIPTION | DATE |
|---|---|---|

1. All design concepts, drawings, specifications, millwork and details drawn or represented herein are the property of Angelo Yuran ⓒ and no part of the same shall be reproduced, copied, disclosed or used in any manner other than for the specific project shown without the written consent of the designer.
2. All work shall conform with local and Provincial Building Code latest edition.
3. All dimensions and conditions shall be verified on site and any discrepancies shall be reported to the designer for clarification before proceeding with construction.

DRAWING TITLE:

PROJECT:

PROJECT NO.:
—

CONTACT:
—

SCALE:

DRAWING NO.:

DATE:
0000/00/00

REF 8

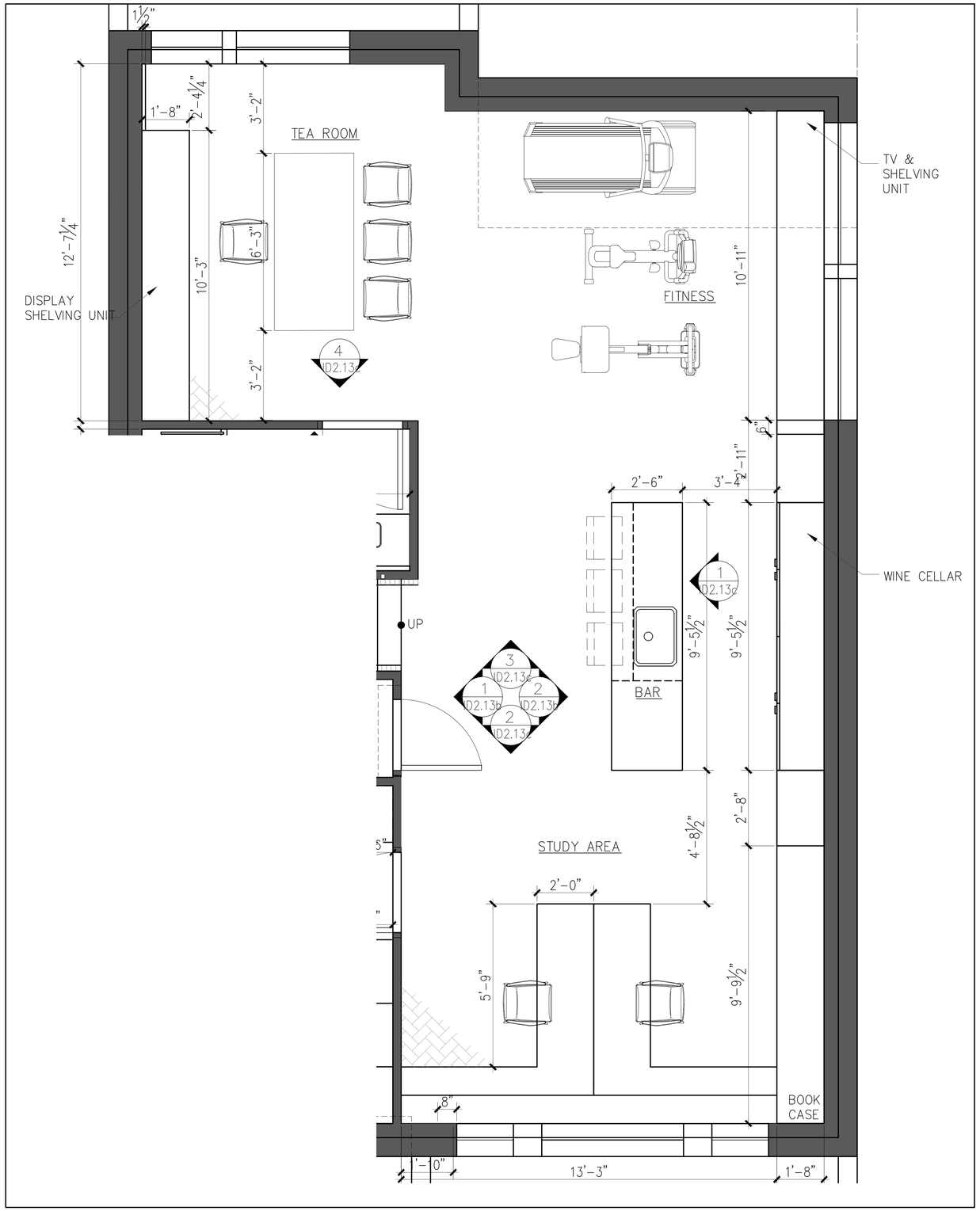


— ID1.05 PLAN – STUDY AREA / BAR / FITNESS / TEA ROOM
Scale: 1/2" = 1'-0"

| ITEM | DESCRIPTION | DATE |
|---|---|---|

1. All design concepts, drawings, specifications, millwork and details drawn or represented herein are the property of Angela Yuran Ji and no part of the same shall be reproduced, copied, disclosed or used in any manner other than for the specific project shown without the written consent of the designer.
2. All work shall conform with local and Provincial Building Code latest edition.
3. All dimensions and conditions shall be verified on site and any discrepancies shall be reported to the designer for clarification before proceeding with construction.

DRAWING TITLE:

PROJECT:

PROJECT NO.: –

CONTACT: –

SCALE:

DRAWING NO.: D2.13c

DATE: 0000/00/00

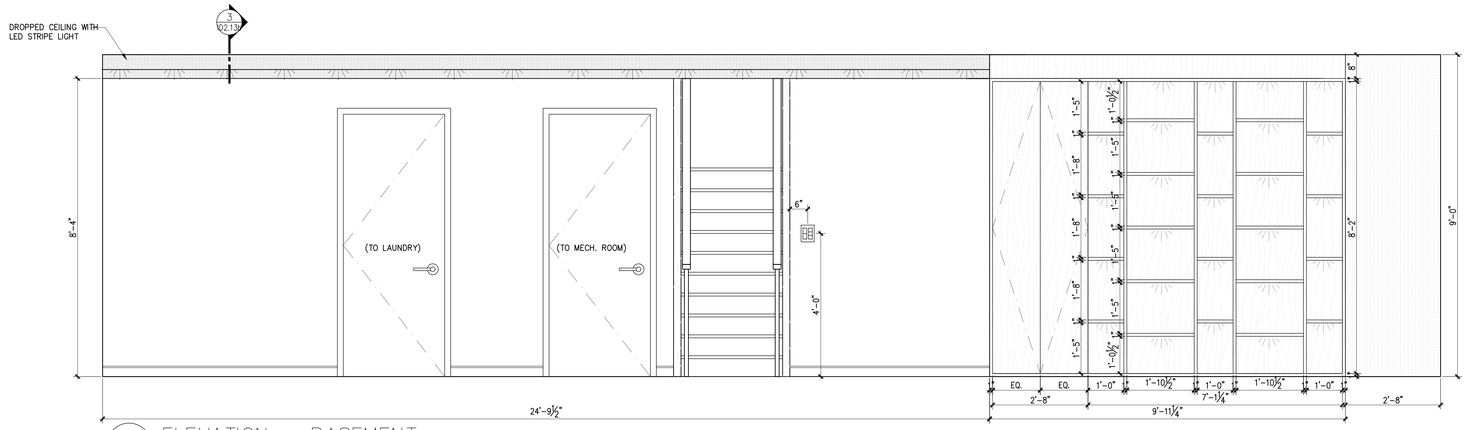


1 ID1.05 ELEVATION – BASEMENT
Scale: 1/2" = 1'-0"

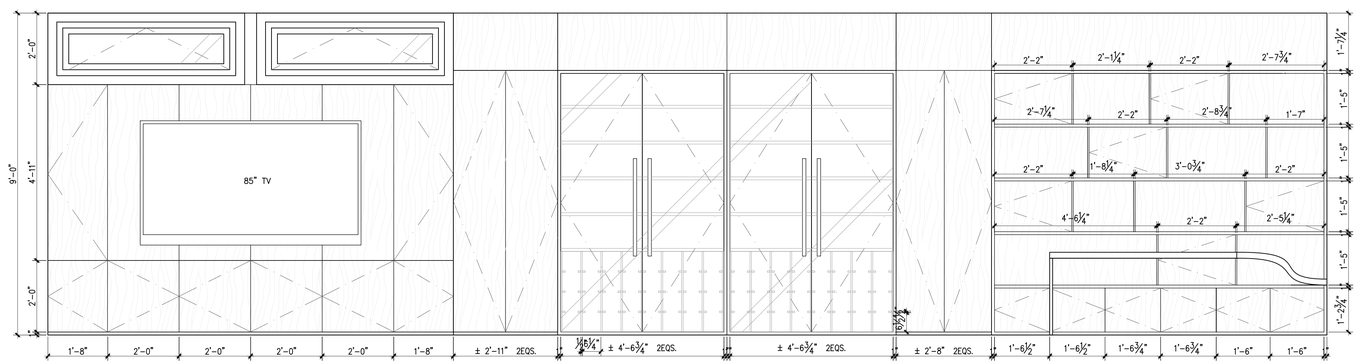


2 ID1.05 ELEVATION – BASEMENT
Scale: 1/2" = 1'-0"

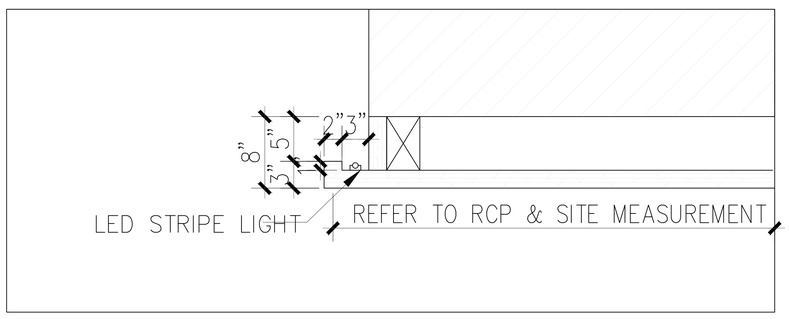


3 ID2.13b DETAIL – DROPPED CEILING
Scale: 1-1/2" = 1'-0"

| ITEM | DESCRIPTION | DATE |
|---|---|---|

1. All design concepts, drawings, specifications, millwork and details drawn or represented herein are the property of Angela Yuran JI and no part of the same shall be reproduced, copied, disclosed or used in any manner other than for the specific project shown without the written consent of the designer.
2. All work shall conform with local and Provincial Building Code latest edition.
3. All dimensions and conditions shall be verified on site and any discrepancies shall be reported to the designer for clarification before proceeding with construction.

DRAWING TITLE:

PROJECT:

PROJECT NO.:
—

CONTACT:
—

SCALE:

DRAWING NO.:

DATE:
0000/00/00

D2.13b

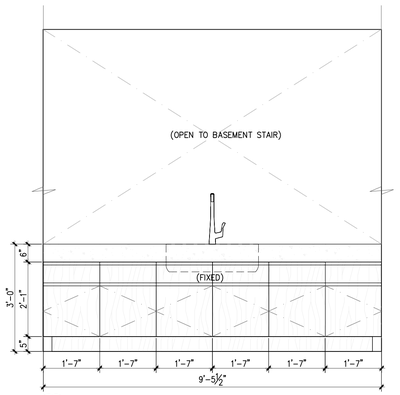


1 ID1.05 ELEVATION – BAR
Scale: 1/2" = 1'-0"

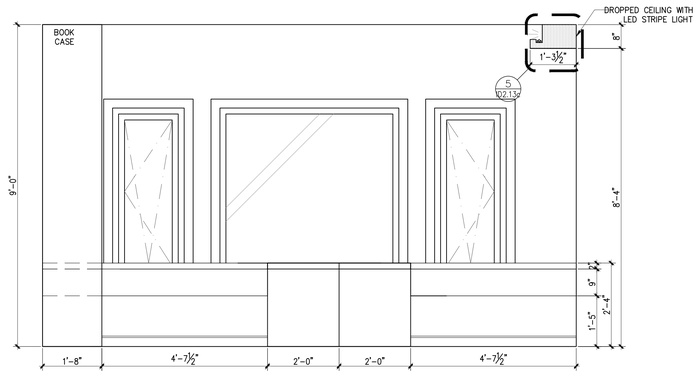


2 ID1.05 ELEVATION – STUDY AREA
Scale: 1/2" = 1'-0"

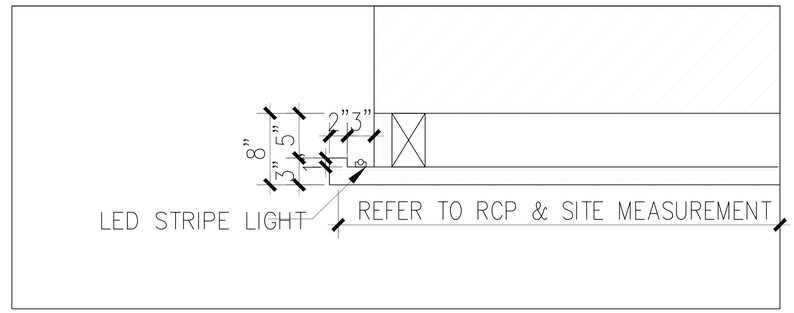


5 ID2.13c DETAIL – DROPPED CEILING
Scale: 1-1/2" = 1'-0"

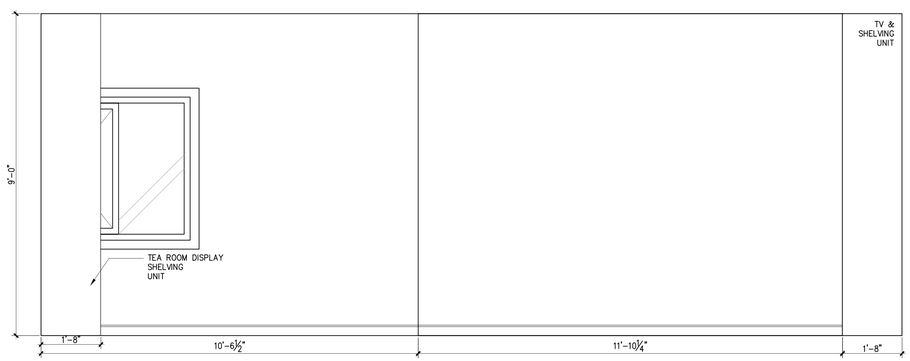


3 ID1.05 ELEVATION – BASEMENT
Scale: 1/2" = 1'-0"

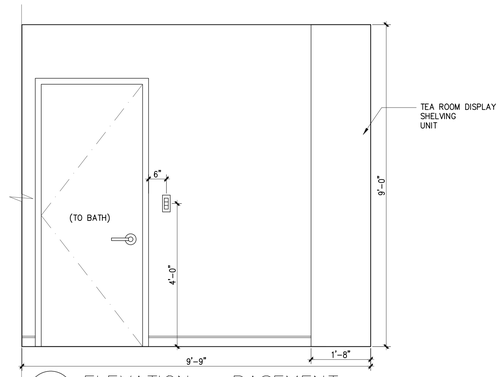


4 ID1.05 ELEVATION – BASEMENT
Scale: 1/2" = 1'-0"

| ITEM | DESCRIPTION | DATE |
|---|---|---|


1. All design concepts, drawings, specifications, millwork and details drawn or represented herein are the property of Angelo Yuran ⓒ and no part of the same shall be reproduced, copied, disclosed or used in any manner other than for the specific project shown without the written consent of the designer.

2. All work shall conform with local and Provincial Building Code latest edition.
3. All dimensions and conditions shall be verified on site and any discrepancies shall be reported to the designer for clarification before proceeding with construction.

DRAWING TITLE:

PROJECT:

PROJECT NO.:
–

CONTACT:
–

SCALE:

DRAWING NO.:

DATE:
0000/00/00

D2.13c

| ITEM | DESCRIPTION | DATE |
|---|---|---|

1. All design concepts, drawings, specifications, millwork and details drawn or represented herein are the property of Angela Yuran Ji and no part of the same shall be reproduced, copied, disclosed or used in any manner other than for the specific project shown without the written consent of the designer.
2. All work shall conform with local and Provincial Building Code latest edition.
3. All dimensions and conditions shall be verified on site and any discrepancies shall be reported to the designer for clarification before proceeding with construction.

DRAWING TITLE:

PROJECT:

PROJECT NO.:
—

CONTACT:
—

SCALE:

DRAWING NO.:

DATE:
0000/00/00

REF 9

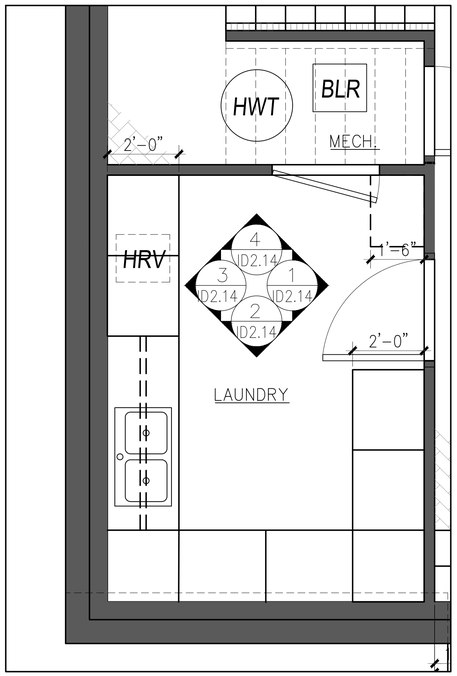


— ID1.05 PLAN – LAUNDRY
Scale: 1/2" = 1'-0"

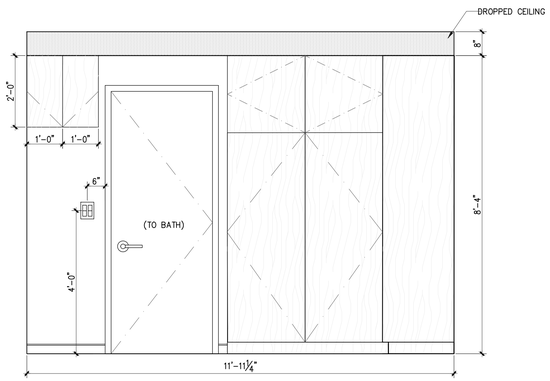


1 ID1.05 ELEVATION – LAUNDRY
Scale: 1/2" = 1'-0"

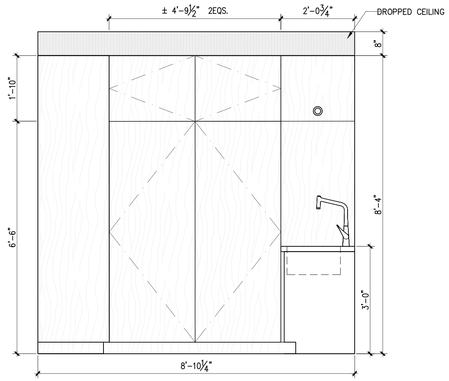


2 ID1.05 ELEVATION – LAUNDRY
Scale: 1/2" = 1'-0"

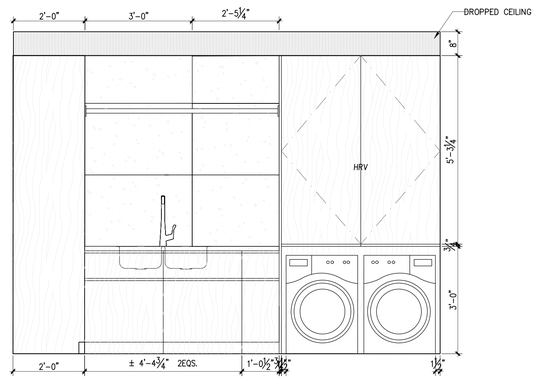


3 ID1.05 ELEVATION – LAUNDRY
Scale: 1/2" = 1'-0"

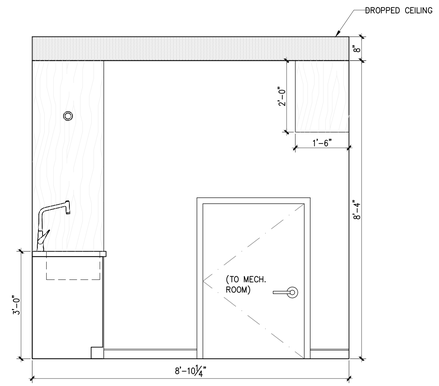


4 ID1.05 ELEVATION – LAUNDRY
Scale: 1/2" = 1'-0"

| ITEM | DESCRIPTION | DATE |
|---|---|---|


1. All design concepts, drawings, specifications, millwork and details drawn or represented herein are the property of Angelo Yuran Jr and no part of the same shall be reproduced, copied, disclosed or used in any manner other than for the specific project shown without the written consent of the designer.

2. All work shall conform with local and Provincial Building Code latest edition.
3. All dimensions and conditions shall be verified on site and any discrepancies shall be reported to the designer for clarification before proceeding with construction.

DRAWING TITLE:

PROJECT:

PROJECT NO.:
–

CONTACT:
–

SCALE:

DRAWING NO.:

DATE:
0000/00/00

ID2.14

| ITEM | DESCRIPTION | DATE |
|---|---|---|


1. All design concepts, drawings, specifications, millwork and details drawn or represented herein are the property of Angela Yuron JI and no part of the same shall be reproduced, copied, disclosed or used in any manner other than for the specific project shown without the written consent of the designer.

2. All work shall conform with local and Provincial Building Code latest edition.
3. All dimensions and conditions shall be verified on site and any discrepancies shall be reported to the designer for clarification before proceeding with construction.

DRAWING TITLE:

PROJECT:

PROJECT NO.:
—

CONTACT:
—

SCALE:

DATE:
0000/00/00

DRAWING NO.:
REF 10

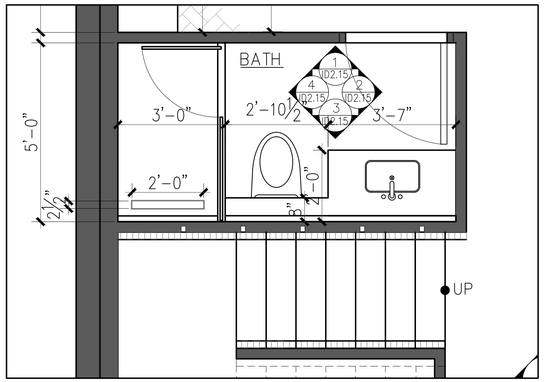


– / ID1.05 PLAN – BATH
Scale: 1/2" = 1'-0"

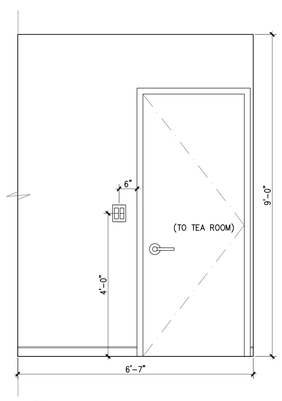


1 / ID1.05 ELEVATION – BATH
Scale: 1/2" = 1'-0"

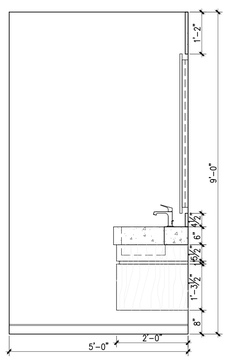


2 / ID1.05 ELEVATION – BATH
Scale: 1/2" = 1'-0"

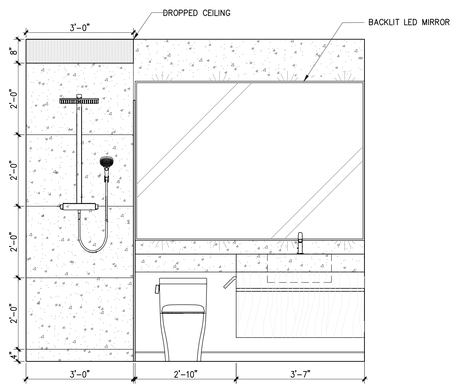


3 / ID1.05 ELEVATION – BATH
Scale: 1/2" = 1'-0"

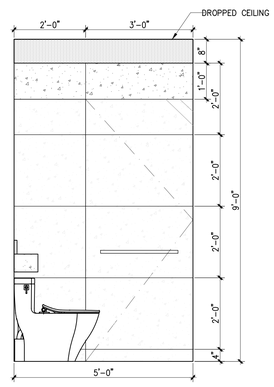


4 / ID1.05 ELEVATION – BATH
Scale: 1/2" = 1'-0"

| ITEM | DESCRIPTION | DATE |
|---|---|---|

1. All design concepts, drawings, specifications, millwork and details drawn or represented herein are the property of Angelo Yuran Jr and no part of the same shall be reproduced, copied, disclosed or used in any manner other than for the specific project shown without the written consent of the designer.
2. All work shall conform with local and Provincial Building Code latest edition.
3. All dimensions and conditions shall be verified on site and any discrepancies shall be reported to the designer for clarification before proceeding with construction.

DRAWING TITLE:

PROJECT:

PROJECT NO.:
–

CONTACT:
–

SCALE:

DRAWING NO.:

DATE:
0000/00/00

ID2.15

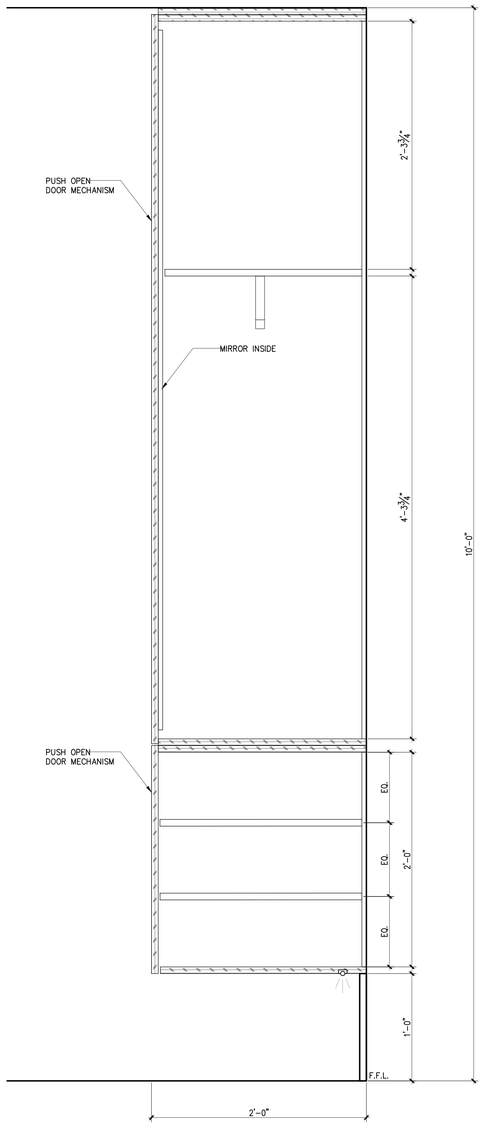


1 ID2.01 SECTION – ENTRY CABINET
Scale: 1–1/2" = 1'–0"

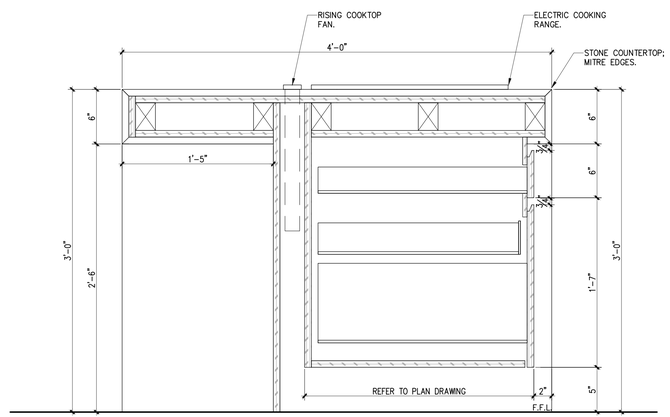


2 ID2.04 SECTION – KITCHEN ISLAND
Scale: 1–1/2" = 1'–0"

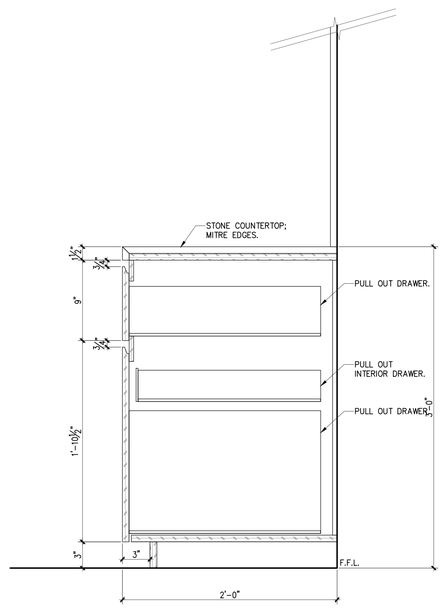


3 ID2.04 SECTION – CN. KITCHEN
Scale: 1–1/2" = 1'–0"

| ITEM | DESCRIPTION | DATE |
|---|---|---|

1. All design concepts, drawings, specifications, millwork and details drawn or represented herein are the property of Angelo Yuron JI and no part of the same shall be reproduced, copied, disclosed or used in any manner other than for the specific project shown without the written consent of the designer.
2. All work shall conform with local and Provincial Building Code latest edition.
3. All dimensions and conditions shall be verified on site and any discrepancies shall be reported to the designer for clarification before proceeding with construction.

DRAWING TITLE:

PROJECT:

PROJECT NO.:
–

CONTACT:
–

SCALE:

DRAWING NO.:

DATE:
0000/00/00

ID3.01

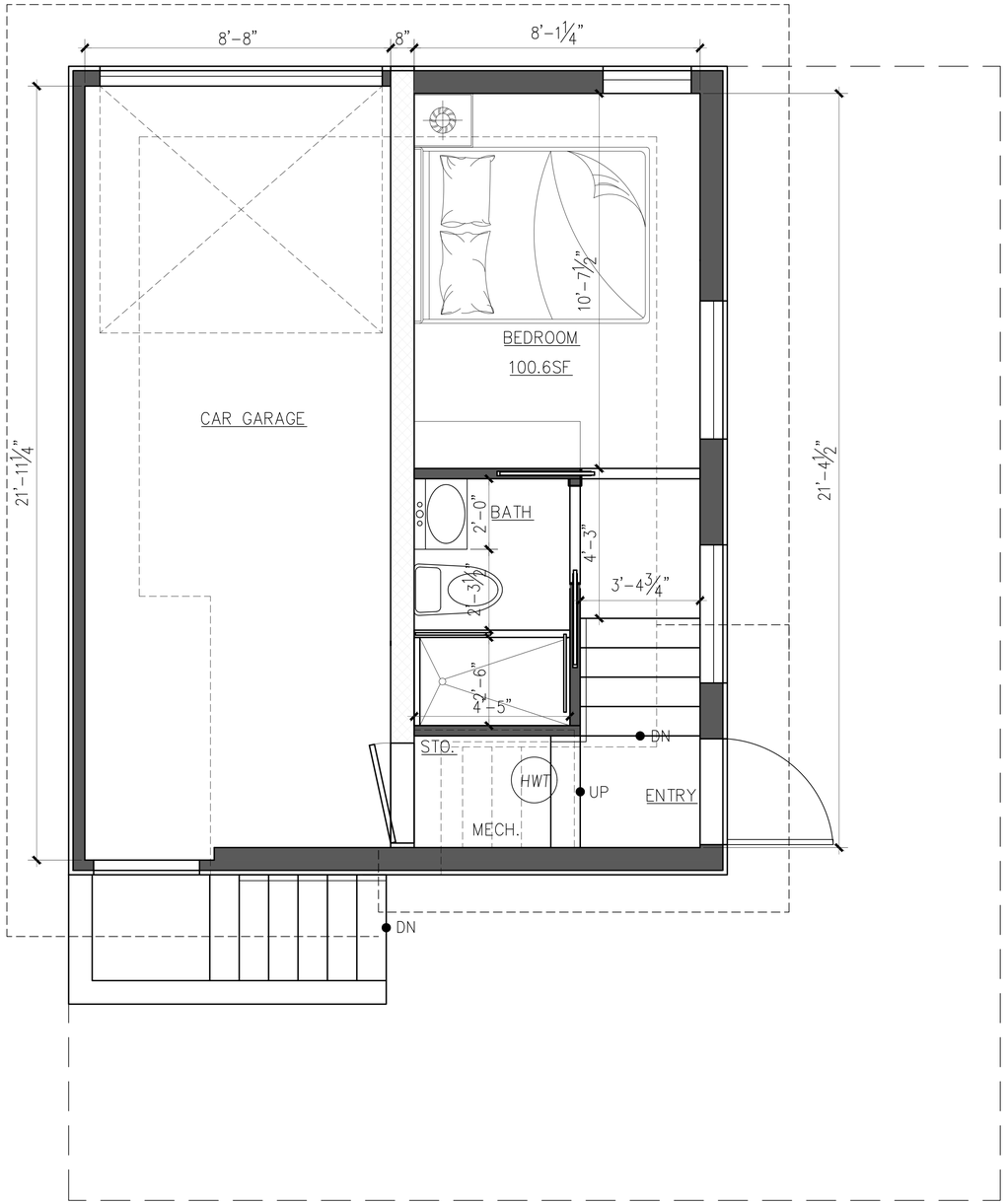


1 ID4.01 LANEWAY HOUSE – LOWER FLOOR PLAN
Scale: 1/2" = 1'-0"

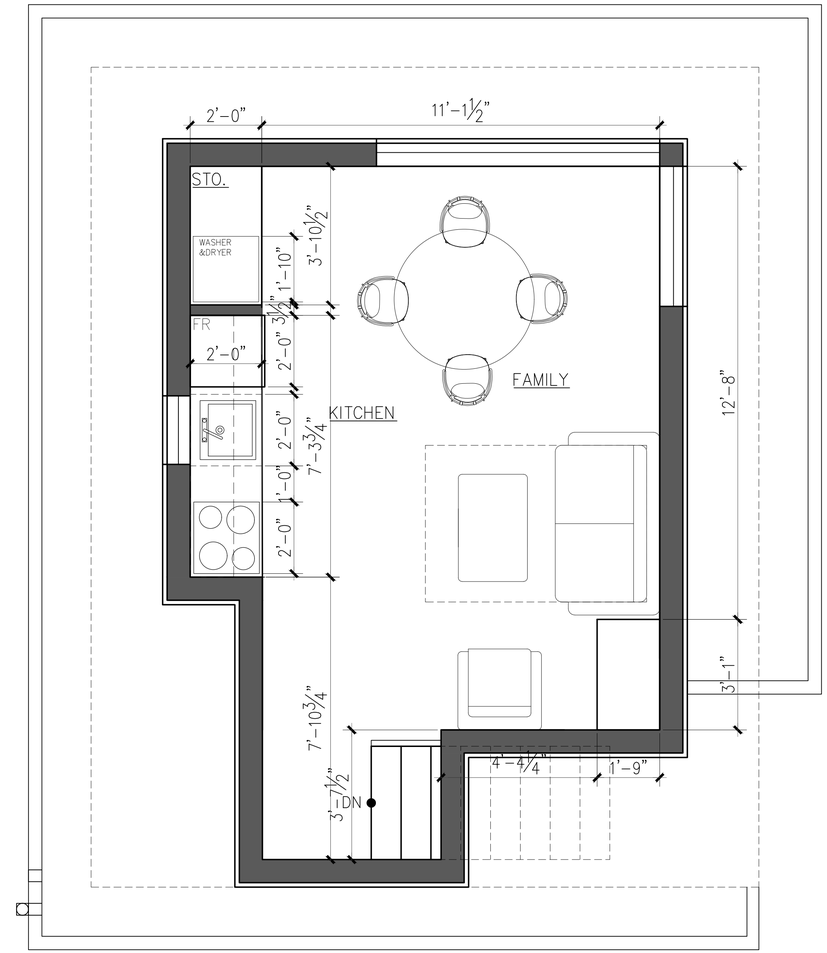


2 ID4.01 LANEWAY HOUSE – UPPER FLOOR PLAN
Scale: 1/2" = 1'-0"

| ITEM | DESCRIPTION | DATE |
|---|---|---|

1. All design concepts, drawings, specifications, millwork and details drawn or represented herein are the property of Angela Yuran JL and no part of the same shall be reproduced, copied, disclosed or used in any manner other than for the specific project shown without the written consent of the designer.
2. All work shall conform with local and Provincial Building Code latest edition.
3. All dimensions and conditions shall be verified on site and any discrepancies shall be reported to the designer for clarification before proceeding with construction.

DRAWING TITLE: LANEWAY HOUSE – CONSTRUCTION PLAN

PROJECT:

PROJECT NO.: –

CONTACT: –

SCALE:

DRAWING NO.: ID4.01

DATE: 0000/00/00

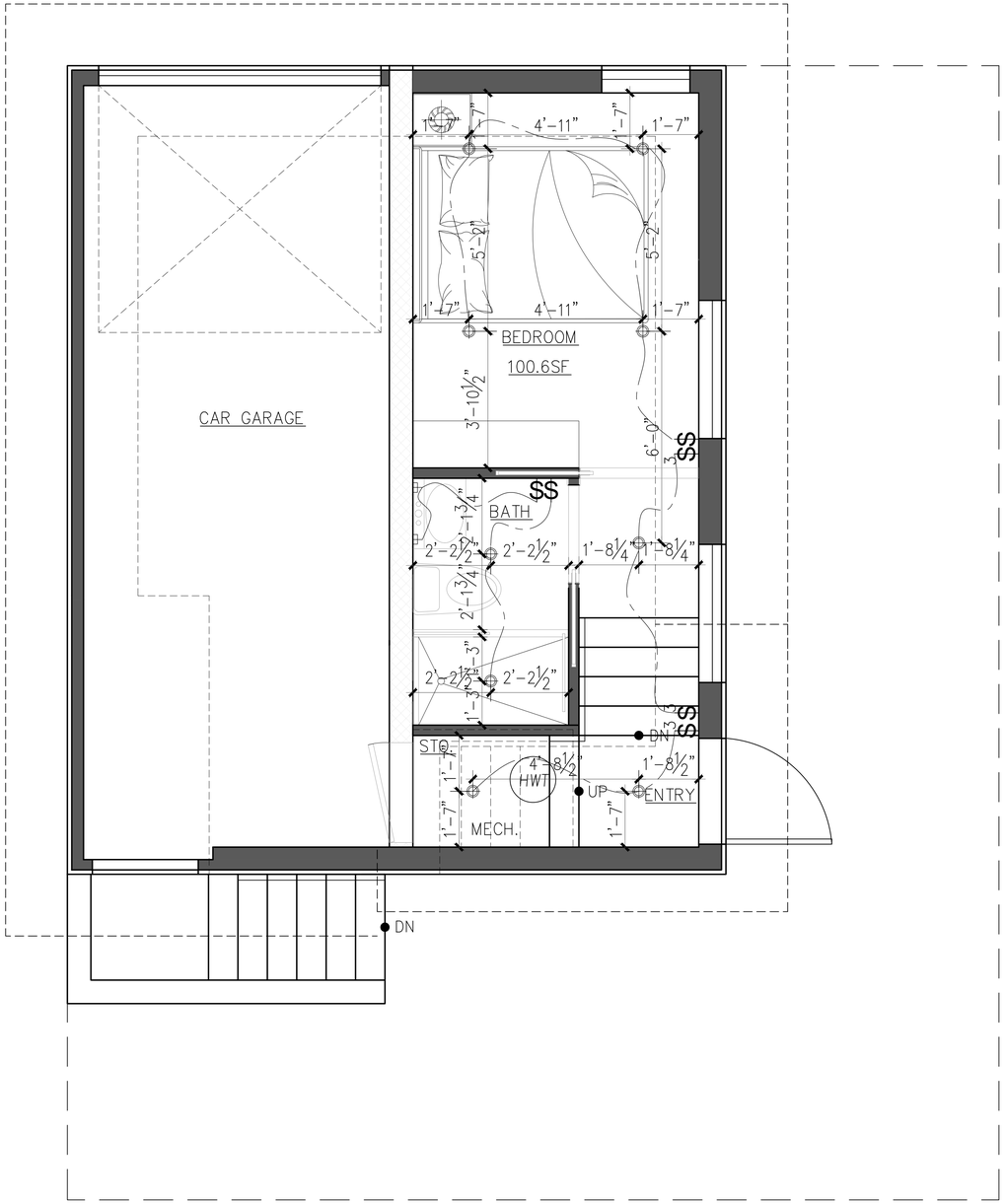


1 ID4.02 LANEWAY HOUSE – LOWER FLOOR REFLECTED CEILING PLAN
Scale: 1/2" = 1'-0"

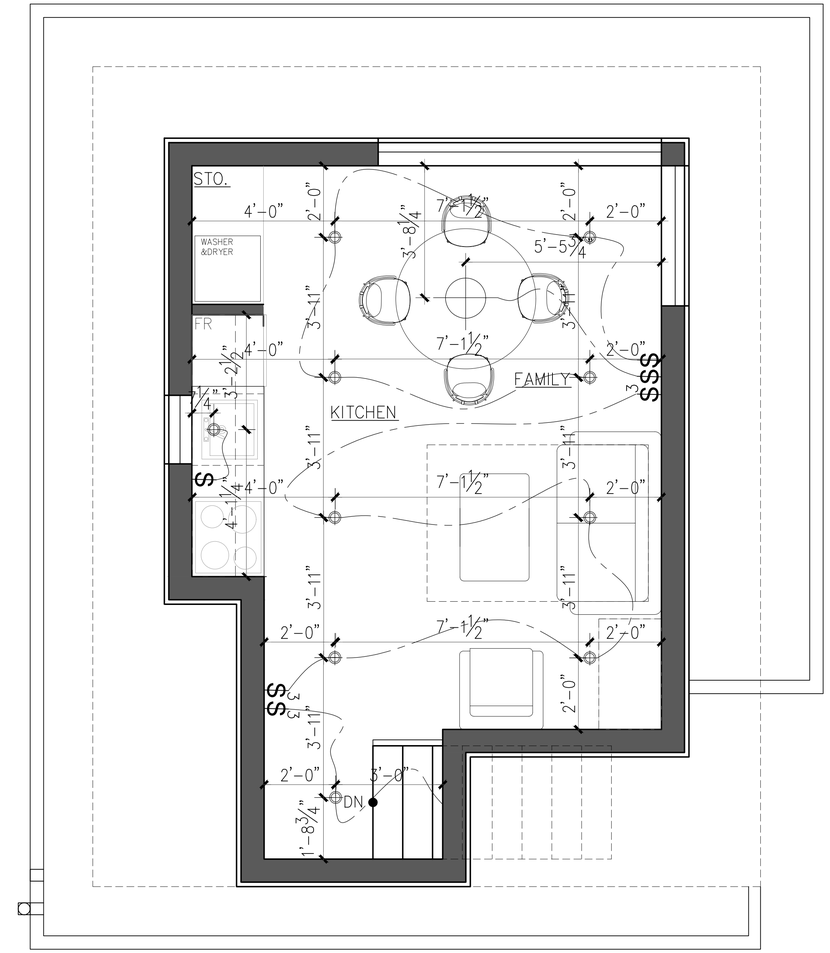


2 ID4.02 LANEWAY HOUSE – UPPER FLOOR REFLECTED CEILING PLAN
Scale: 1/2" = 1'-0"

| ITEM | DESCRIPTION | DATE |
|---|---|---|

1. All design concepts, drawings, specifications, millwork and details drawn or represented herein are the property of Angela Yuron JI and no part of the same shall be reproduced, copied, disclosed or used in any manner other than for the specific project shown without the written consent of the designer.
2. All work shall conform with local and Provincial Building Code latest edition.
3. All dimensions and conditions shall be verified on site and any discrepancies shall be reported to the designer for clarification before proceeding with construction.

DRAWING TITLE: LANEWAY HOUSE – REFLECTED CEILING

PROJECT:

PROJECT NO.: –

CONTACT: –

SCALE:

DRAWING NO.: ID4.02

DATE: 0000/00/00

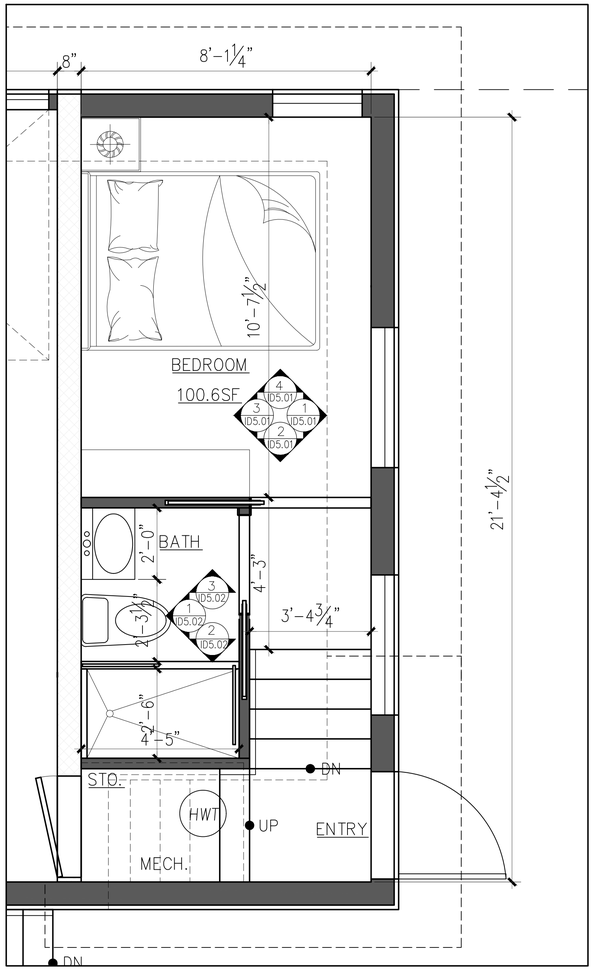


— PLAN – ENTRY & BED
ID4.01 Scale: 1/2" = 1'-0"

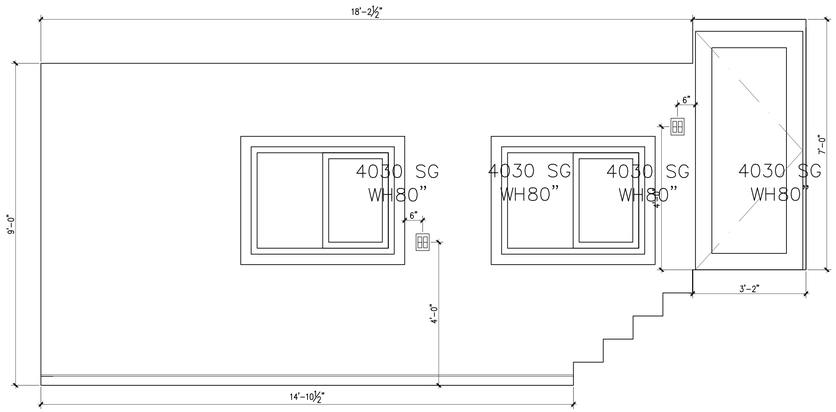


1 ID4.01 ELEVATION – ENTRY & BED
Scale: 1/2" = 1'-0"

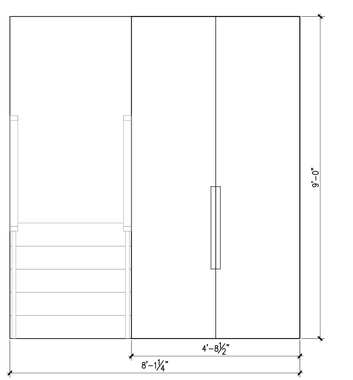


2 ID4.01 ELEVATION – ENTRY & BED
Scale: 1/2" = 1'-0"

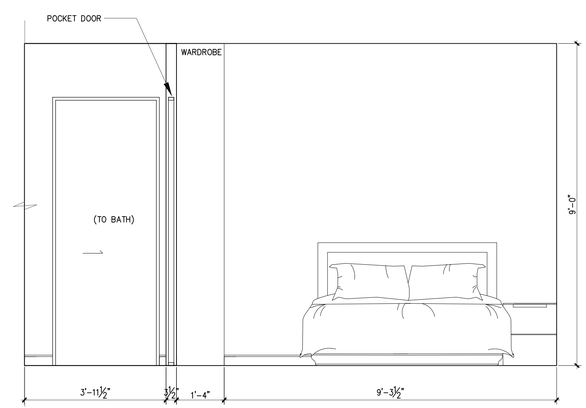


3 ID4.01 ELEVATION – BED
Scale: 1/2" = 1'-0"

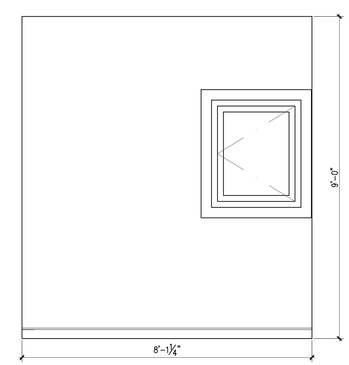


4 ID4.01 ELEVATION – BED
Scale: 1/2" = 1'-0"

| ITEM | DESCRIPTION | DATE |
|---|---|---|

1. All design concepts, drawings, specifications, millwork and details drawn or represented herein are the property of Angelo Yuran & and no part of the same shall be reproduced, copied, disclosed or used in any manner other than for the specific project shown without the written consent of the designer.
2. All work shall conform with local and Provincial Building Code latest edition.
3. All dimensions and conditions shall be verified on site and any discrepancies shall be reported to the designer for clarification before proceeding with construction.

DRAWING TITLE:

PROJECT:

PROJECT NO.:
–

CONTACT:
–

SCALE:

DRAWING NO.:

DATE:
0000/00/00

ID5.01

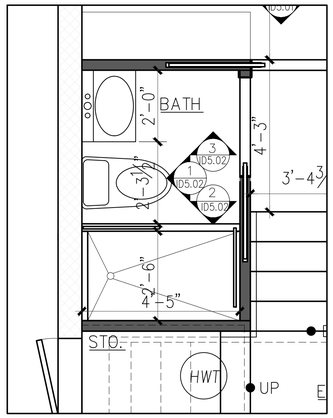


– / ID4.01 PLAN – BATH
Scale: 1/2" = 1'-0"

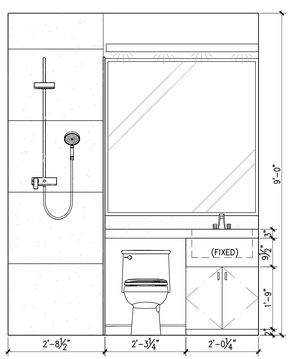


1 / ID4.01 ELEVATION – BATH
Scale: 1/2" = 1'-0"

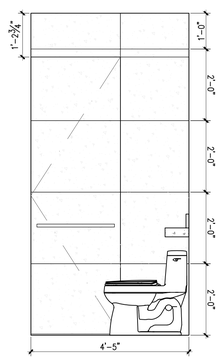


2 / ID4.01 ELEVATION – BATH
Scale: 1/2" = 1'-0"

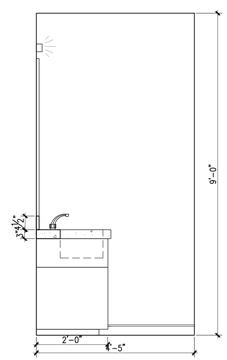


3 / ID4.01 ELEVATION – BATH
Scale: 1/2" = 1'-0"

| ITEM | DESCRIPTION | DATE |
|---|---|---|

1. All design concepts, drawings, specifications, millwork and details drawn or represented herein are the property of Angelo Yuran ⓒ and no part of the same shall be reproduced, copied, disclosed or used in any manner other than for the specific project shown without the written consent of the designer.
2. All work shall conform with local and Provincial Building Code latest edition.
3. All dimensions and conditions shall be verified on site and any discrepancies shall be reported to the designer for clarification before proceeding with construction.

DRAWING TITLE:

PROJECT:

PROJECT NO.:
–

CONTACT:
–

SCALE:

DRAWING NO.:

DATE:
0000/00/00

ID5.02

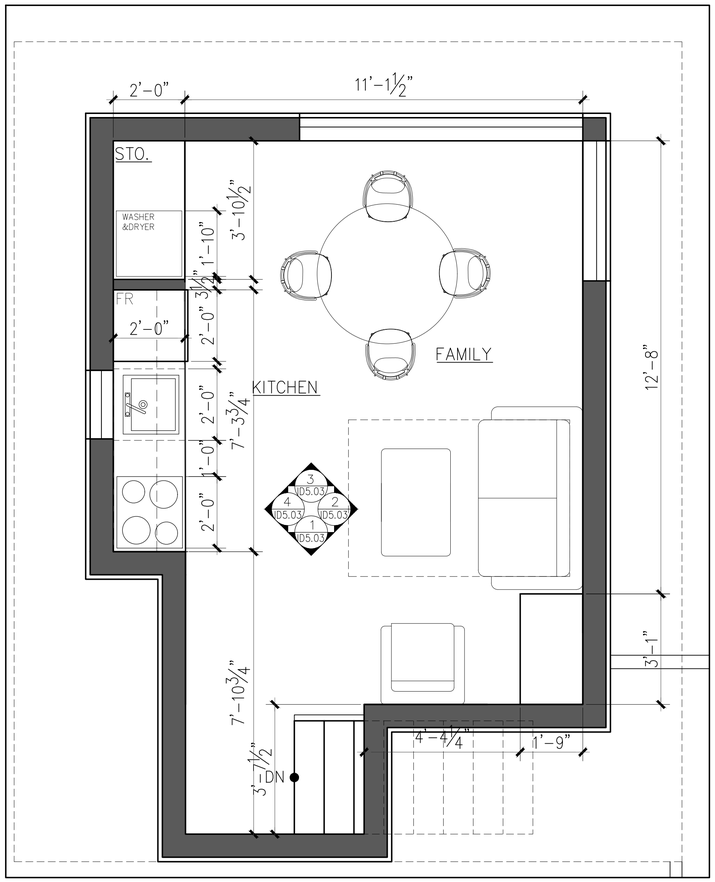


— PLAN — STUDIO
ID4.01 Scale: 1/2" = 1'-0"

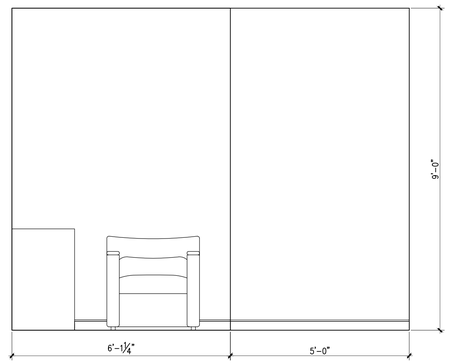


1 ID4.01 ELEVATION — STUDIO
Scale: 1/2" = 1'-0"

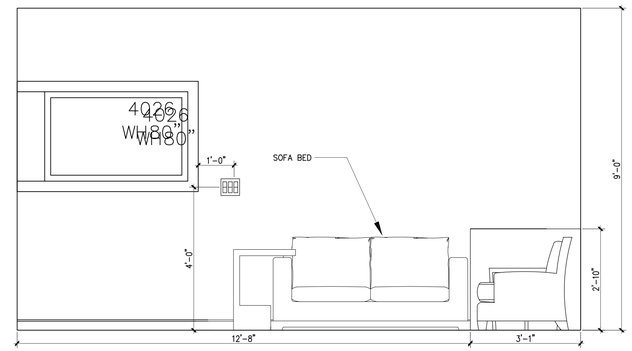


2 ID4.01 ELEVATION — STUDIO
Scale: 1/2" = 1'-0"

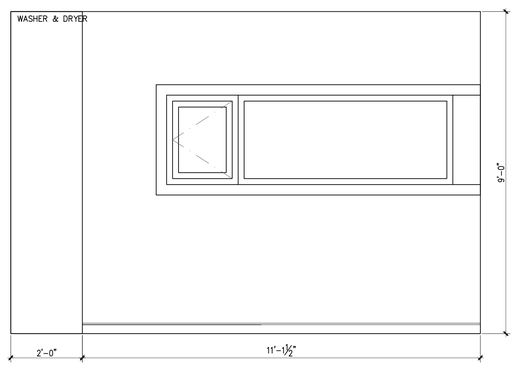


3 ID4.01 ELEVATION — STUDIO
Scale: 1/2" = 1'-0"

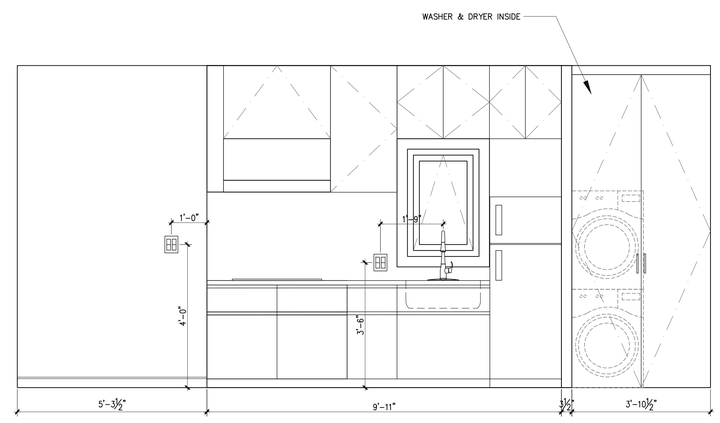


4 ID4.01 ELEVATION — STUDIO
Scale: 1/2" = 1'-0"

| ITEM | DESCRIPTION | DATE |
|---|---|---|

1. All design concepts, drawings, specifications, millwork and details drawn or represented herein are the property of Angela Yuran Ji and no part of the same shall be reproduced, copied, disclosed or used in any manner other than for the specific project shown without the written consent of the designer.
2. All work shall conform with local and Provincial Building Code latest edition.
3. All dimensions and conditions shall be verified on site and any discrepancies shall be reported to the designer for clarification before proceeding with construction.

DRAWING TITLE:

PROJECT:

PROJECT NO.:
—

CONTACT:
—

SCALE:

DRAWING NO.:

DATE:
0000/00/00

ID5.03

# Material Boards & Specs

4191 West 12th Ave

# Main Floor – Living & Dining Area

# Main Floor – Powder Room

# Upper Floor – Master Bed

# Upper Floor – Master Bath

# Typical Bath

# Basement – Tea Area

**Miele 30” Refrigeration**
W30” X H83 3/4” X D24”
K2801Vi

**Miele 18” Fully Integrated MasterCool**
W17 3/4” X H83 3/4” X D24”
F2471Vi

**Miele 24” Speed Oven**
W22 1/16” X
H17 1/2” X D21
11/16”
H6700BM
Price: $5,099.00

**Miele 24” Combi-Steam Oven**
W21 9/16” X
H23 1/4” X D22
3/8”
DGC6760XXL
Price: $7,999.00

**Samsung 24 Inch Built-In Dishwasher**
W23.75” X H33.75” X D24.625”
DW80N3030US
Price: $580.10

**Miele 36” Rangetop**
W35 15/16” X H7 1/2” X D26 1/2”
KMR1134-1 G
Price: $5,999.00

**Miele 36” Range Wall Hood**
W35 15/16” X H18” X D24 1/16”
DAR1230
Price: $3,099.00

**Samsung Front Load Washer**
W27.01” X H46.93” X D34.02”
WV60M9900AV
Price: $1,699.98

**Samsung Electric Dryer**
W27” X H46.5” X D32.5”
DVE60M9900V
Price: $1,699.98

**Kitchen Sink Faucet**
HANSGROHE 73820001
Metris select kitchen faucet, 2-spray pull-out - chrome
Price: $588.70
Quantity: 2

**Undermount Kitchen Sink**
BLANCO 402266
Blanco precis u super single - concrete gray finish
Price: $669.00
Quantity: 2

**Kitchen Accessory**
BLANCO 517666
Blanco capflow strainer cover- stainless steel
Price: $22.20
Quantity: 2

**Garbage Disposal**
INSINKERATOR EVOLUTION EXCEL
Evolution Excel 1 HP continuous feed food waste disposer
Price: $496.86
Quantity: 2

**Undermount Bar Sink**
BLANCO 400825
Blanco Precis U 1- anthracite anthracite finish
Price: $586.38

**Retractable Faucet**
BLANCO 401315
Blanco Alta- chrome/anthracite
Price: $763.00

**Sink Faucet**
AXOR 18020001
Massaud Lav Mixer Tall
Single hole bathroom sink faucet- chrome
Price: $1,324.55

**Toilet**
TOTO MS624234CEFG#01
Legato one-piece elongated 1.28 GPF toilet with CEFIONTECT- white
Price: $946.33

**Undermount Bathroom Sink**
AXOR 42305000
Massaud Vessel Small- chrome
Price: $1,566.00

**Drain Assembly**
HANSGROHE 50001001
HG sink drain 1 1 /4’’- chrome
Price: $48.60

**Sink Faucet**
AXOR 39135001
Citterio widespread lav set lever handle- chrome
Price: $1,136.00
Quantity: 2

**Undermount Sink**
DURAVIT 03304800001
Duravit Vero drop-in bathroom sink- white wondergliss
Price: $252.00
Quantity: 2

**Bathtub**
VENCO VFS-8098-180
71” x 32” x 29”
Price: $2,365.00

**Freestanding Tub Filler**
AXOR 39451001
Citterio freestanding tub filler- chrome
Price: $1,767.05

**Shower Faucet Trim**
AXOR 10751001
Axor starck thermostatic trim shower system w/ 3 vol control- chrome
Price: $1,204.80

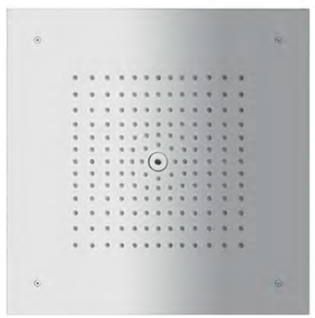

**Rainshower**
HANSGROHE 26255001
Price: $584.40

**Handshower**
HANSGROHE 26864001
Price: $177.60

**Freestanding Tub Drain**
OS&B ITD35
Price: $130.00

**Rough, Showerhead 400 Square 1-Jet Faucet Rough-In Valve**
HANSGROHE 26254181
Price: $91.20

**Rough Freestanding Tub Filler**
AXOR 10452181
Price: $479.08

**Rough, Axor Starck Thermostatic Shower System**
AXOR 10750181
Price: $856.08

**Hand Shower Slide Bar**
HANSGROHES 28631000
Unica ''S Puro 900 mm- chrome
Price: $145.58

**Bodyspray**
AXOR 28491001
Shower module 4-3/14'' X 4-3/4'' (120 X 120 mm)- chrome
Price: $386.00
Quantity: 3

**Toilet**
TOTO MW6243056CEFGA#01
WASHLET + legato one-piece elongated 1.28 GPF toilet - cotton
Price: $2,175.25

**Steam Shower Package**
RELAX A MIST JR-4-C
JR series residential steamer - chrome
Price: $1,457.92

**Bathroom Sink Faucet**
AXOR 34010001
Citterio M Sngle Hole Lav Mixer- chrome
Price: $478.49
Quantity: 3

**Undermount Bathroom Sink**
DURAVIT 03054900001
Duravit Starck 3 drop-In bathroom sink- white with wondergliss finish
Price: $204.00
Quantity: 3

**Bar Mounted Hand Shower**
HANSGROHE 27112401
Raindance Select showerpipe- brushed nickel
Price: $1,316.60
Quantity: 3

**Toilet**
TOTO MS624234CEFG#01
Legato one-piece elongated 1.28 GPF toilet with CEFIONTECT- white
Price: $946.33
Quantity: 3

**Faucet Rough-In Valve**
HANSGROHE 16181181
HG showerpipe basic set
Price: $43.80
Quantity: 3

**Laundry Sink**
HITECHACRYLIC H-S2318
Price: $281.30

**Laundry Sink Faucet**
GROHE 32298001
Price: $353.40